State of Rhode Island
Coastal Resources Management Council
Oliver H. Stedman Government Center
4808 Tower Hill Road, Suite 3
Wakefield, RI 02879-1900

(401) 783-3370
Fax (401) 783-2069

PUBLIC NOTICE

File Number: 2026-11-008 Date: November 11, 2026

This office has under consideration the application of:

Mary-Catherine Burke
50 Overlook Avenue
East Chester, NY 10709

for a State of Rhode Island Assent to construct and maintain: A residential boating facility consisting of a 4' x 32' fixed timber pier, 3'x 20' ramp and 8' x 18.75' terminal float (150sf). No variances are required for the structure which will extend ~50' seaward of the cited MLW mark.

Project Location:	90 Woodsia Road
City/Town:	Narragansett
Plat/Lot:	Plat N-F, Lot 3
Waterway:	Type II, Low Intensity Use, Narrow River (Upper Basin)

Plans of the proposed work can be requested at Cstaff1@crmc.ri.gov.

In accordance with the Administrative Procedures Act (Chapter 42-35 of the Rhode Island General Laws) you may request a hearing on this matter.

You are advised that if you have good reason to enter protests against the proposed work it is your privilege to do so. It is expected that objectors will review the application and plans thoroughly, visit site of proposed work if necessary, to familiarize themselves with the conditions and cite what law or laws, if any, would in their opinion be violated by the work proposed.

If you desire to protest, you must attend the scheduled hearing and give sworn testimony. A notice of the time and place of such hearing will be furnished you as soon as possible after receipt of your request for hearing. If you desire to request a hearing, to receive consideration, it should be in writing (**with your correct mailing address**, **e-mail address and valid contact number**) and be received at this office on or before **December 11, 2026**.

Please email your comments/hearing requests to: cstaff1@crmc.ri.gov; or mail via USPS to: Coastal Resources Management Council; O. S. Government Center, 4808 Tower Hill Road, Rm 116; Wakefield, RI 02879.

/lat

RECEIVED
10/29/2026
COASTAL RESOURCES MANAGEMENT COUNCIL

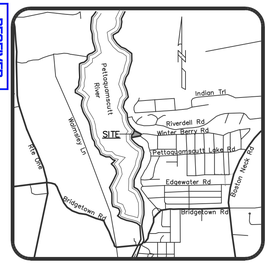

LOCATION MAP
1"=2000'

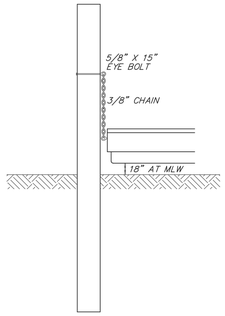

FLOAT STOP DETAIL
NOT TO SCALE

CONSTRUCTION NOTES

1. ALL CONSTRUCTION TO BE DONE WITH HOT DIPPED GALVANIZED CONNECTORS.
2. BOLTED CONSTRUCTION TO BE $\frac{5}{8}$" DIA. BOLTS AND FLAT WASHERS THROUGH-OUT EXCEPT DECKING MAY BE NAILED WITH HOT DIPPED GALVANIZED NAILS.
3. ALL LUMBER TO BE TREATED WITH NON-LEACHING WOOD PRESERVATIVES.
4. NO CREOSOTE SHALL BE APPLIED TO ANY PORTION OF THE STRUCTURE.
5. PROPOSED FLOAT TO BE COMPLETELY ENCASED IN POLYETHYLENE.
6. A "SOFT START" TO PILE DRIVING IS REQUIRED FOR NOAA – ENDANGERED SPECIES
7. THE DOCK BUILDER SHALL AVOID AND MINIMIZE TURBIDITY AND SEDIMENTATION IN ANY ESSENTIAL FISH HABITATS (EFH), TIDAL AND NON-TIDAL SPECIAL AQUATIC SITES (SAS). THIS MAY BE ACHIEVED WITH: A) COFFERDAMS, SILT CURTAINS, WORKING IN THE DRY OR DURING OUTGOING TIDES; B) THE APPROPRIATE TIME OF YEAR RESTRICTIONS FOR FISH AND SHELLFISH; AND/OR C) SETBACKS OF 100 FT FROM TIDAL SAV OR 25 FT FROM OTHER SAS.
8. EMPLOY APPROPRIATE BMP'S TO MINIMIZE TEMPORARY ADVERSE EFFECTS TO SAS, INTERTIDAL HABITAT, AND COMPLEX NRHS, E.G., CONSTRUCTION MATS, LOW GROUND PRESSURE (TYPICALLY LESS THAN OR EQUAL TO 3 PSI), OR WORK IN SALT MARSH DURING FROZEN CONDITIONS.
9. THE LOWERMOST PART OF FLOATS AND WAVE ATTENUATORS SHOULD MAINTAIN 18 INCHES OF CLEARANCE ABOVE THE SUBSTRATE AT ALL TIMES. THE HEIGHT SHOULD BE MEASURED FROM THE SUBSTRATE TO THE LOWERMOST PORTION OF THE DECK STRUCTURE. THIS IS TO MINIMIZE ADVERSE EFFECTS FROM GROUNDING.
10. PRESSURE-TREATED LUMBER PILES SHOULD BE SOAKED IN SALINE WATERS FOR 90 DAYS (OR EQUIVALENT) PRIOR TO INSTALLATION TO ALLOW LEACHING TO OCCUR IN A CONTROLLED SETTING. THE SOAKING WATERS SHOULD BE DISPOSED OF IN A MANNER TO AVOID ENVIRONMENTAL EXPOSURE. PRESSURE-TREATED LUMBER PILES SHOULD NOT BE USED IN AREAS OF CONCENTRATED SHELLFISH. PILES SHOULD BE CONSTRUCTED WITH ALTERNATIVE MATERIALS, SUCH AS PLASTIC, NATURAL CEDAR OR OTHER UNTREATED WOOD, OR COATED OFFSITE WITH AN IMPACT RESISTANT, BIOLOGICALLY INERT SUBSTANCE TO MINIMIZE LEACHATE INTO SHELLFISH AREAS.

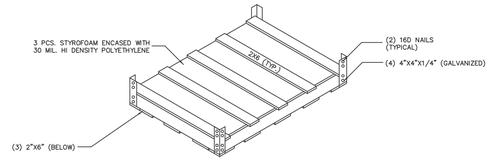

FLOATING BOX DETAIL
NOT TO SCALE

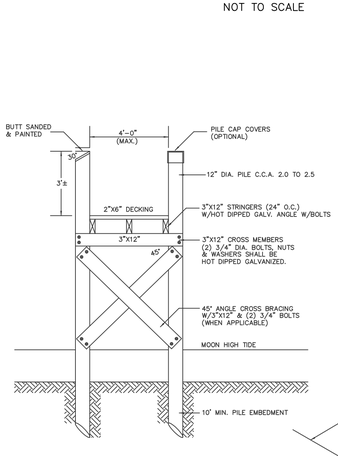

DECK CROSS SECTION
NOT TO SCALE

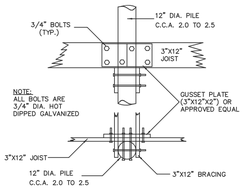

DETAIL "A"
NOT TO SCALE

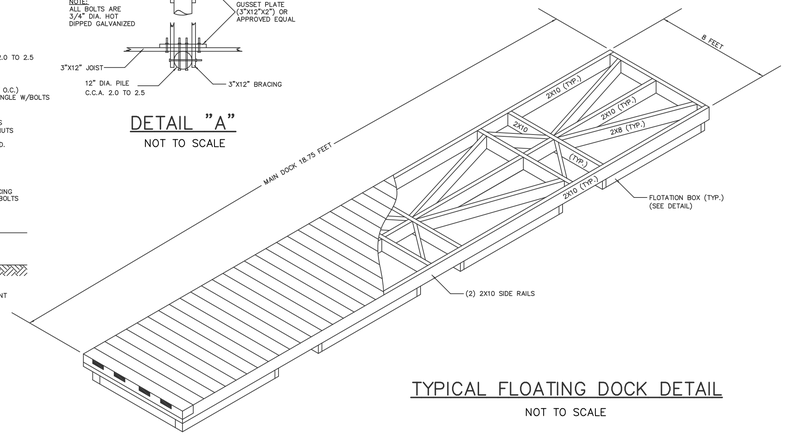

TYPICAL FLOATING DOCK DETAIL
NOT TO SCALE

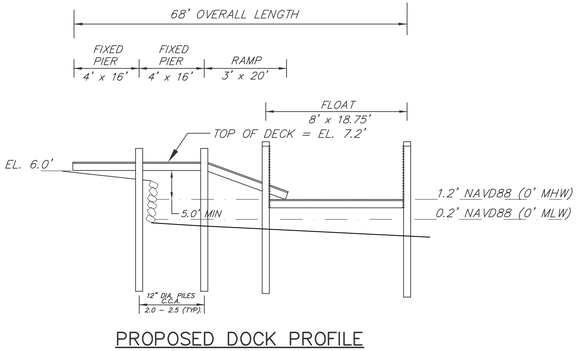

PROPOSED DOCK PROFILE
NOT TO SCALE

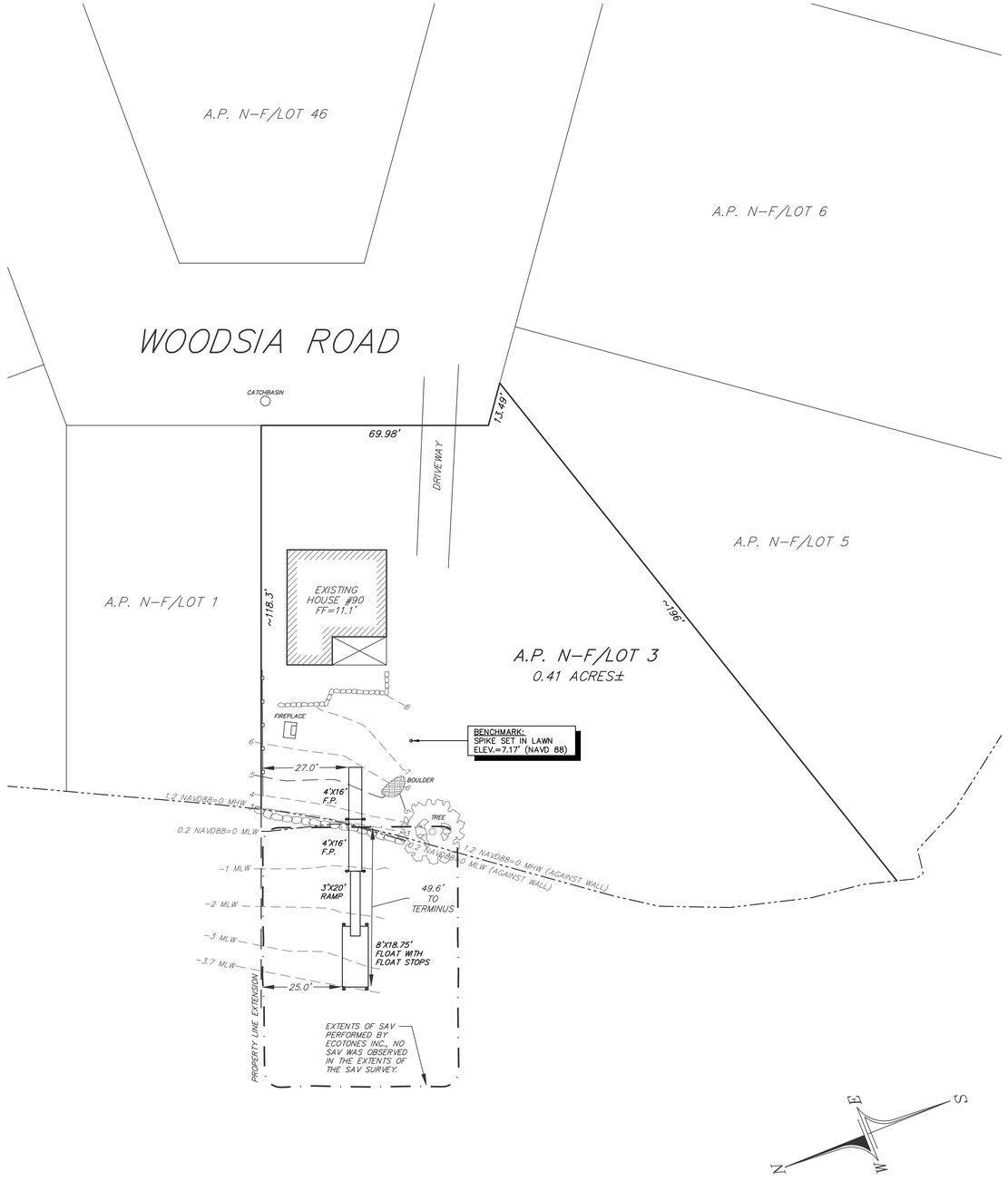

PROPERTY OWNER:

MARY CATHERINE BURKE
50 OVERLOOK AVE
EASTCHESTER, NY 10709

FLOOD ZONE:

"AE" ELEV. = 11' NAVD 1988

1"=20'
0 10' 20' 40' 60'
GRAPHIC SCALE

DOCK PLAN

PREPARED FOR

MARY CATHERINE BURKE

ASSESSOR'S PLAT N-F LOT 3
SITUATED IN THE TOWN OF
NARRAGANSETT, RHODE ISLAND

NO.	REVISION	DATE

MARK L. DOWDELL
10/22/26
No. 14104
REGISTERED PROFESSIONAL ENGINEER
CIVIL

DOWDELL ENGINEERING
DOWDELL ENGINEERING ASSOCIATES, LLC
CIVIL & ENVIRONMENTAL ENGINEERS
SURVEYORS & LAND PLANNERS
P.O. BOX 1684 • 3949 OLD POST ROAD
CHARLESTOWN, RHODE ISLAND 02813
(401) 364-1027
WEBSITE: dowdelleng.com EMAIL: mark@dowdelleng.com

JOB NO. 3778	DRAWN BY:	R.L.C.
DWG. NO. 3778-DCK	CHECKED:	M.L.D.
	APPROVED:	M.L.D.
SCALE: AS NOTED	DATE:	OCT. 22, 2026

SHEET: 1
1 OF 1 SHEETS