State of Rhode Island
Coastal Resources Management Council
Oliver H. Stedman Government Center
4808 Tower Hill Road, Suite 3
Wakefield, RI 02879-1900

(401) 783-3370
Fax (401) 783-2069

PUBLIC NOTICE

File Number: 2026-08-047 Date: September 23, 2026

This office has under consideration the application of:

Department of Environmental Management
c/o Daniel Costa
235 Promenade Street
Providence, RI 02908

for a State of Rhode Island Assent to construct and maintain: The proposed work consists of replacing an existing timber main dock that has 4 parallel dock fingers, with an equally long timber main dock with 5 parallel dock fingers. No seaward expansions of the main dock or dock fingers are proposed. The widths of the proposed main timber dock and dock fingers have been reduced to accommodate the additional finger, and results in only a 160.5 square-foot net increase in dock footprint.

Project Location:	45 State Street - Pier KK
City/Town:	Narragansett
Plat/Lot:	Plat: I-G; Lots 266-S, 266-SXM, 96
Waterway:	Point Judith Pond

Plans of the proposed work can be requested at Cstaff1@crmc.ri.gov.

In accordance with the Administrative Procedures Act (Chapter 42-35 of the Rhode Island General Laws) you may request a hearing on this matter.

You are advised that if you have good reason to enter protests against the proposed work it is your privilege to do so. It is expected that objectors will review the application and plans thoroughly, visit site of proposed work if necessary, to familiarize themselves with the conditions and cite what law or laws, if any, would in their opinion be violated by the work proposed.

If you desire to protest, you must attend the scheduled hearing and give sworn testimony. A notice of the time and place of such hearing will be furnished you as soon as possible after receipt of your request for hearing. If you desire to request a hearing, to receive consideration, it should be in writing (**with your correct mailing address**, **e-mail address and valid contact number**) and be received at this office on or before **October 23, 2026**.

Please email your comments/hearing requests to: cstaff1@crmc.ri.gov; or mail via USPS to: Coastal Resources Management Council; O. S. Government Center, 4808 Tower Hill Road, Rm 116; Wakefield, RI 02879.

/lat

INDEX OF DRAWINGS			
Sheet Number	Sheet Title	REV. NO.	REV. DATE
GKK-001	COVER SHEET		
GKK-002	GENERAL NOTES		
CKK-101	CONSTRUCTION ACCESS PLAN		
CKK-102	EXISTING LOCATION PLAN		
CKK-103	PROPOSED LOCATION PLAN		
SKK-101	EXISTING PIER PLAN AND SECTION		
SKK-102	PROPOSED PIER PLAN AND SECTION		
SKK-301	PROPOSED PILE LAYOUT PLAN		
SKK-302	PROPOSED PIER ELEVATION AND PILE PLAN		
SKK-303	PROPOSED PIER ELEVATION AND PILE PLAN		
SKK-501	PROPOSED PIER DETAILS		
SKK-502	PROPOSED PIER DETAILS 2		
BKK-001	BORING INFORMATION		

STATE OF RHODE ISLAND

D ■ E ■ M

DEPARTMENT OF ENVIRONMENTAL MANAGEMENT
DIVISION OF PLANNING AND DEVELOPMENT

PIER 'KK' REMOVAL AND REPLACEMENT
PORT OF GALILEE: 26005887: PHASE V

NARRAGANSETT, RHODE ISLAND

Pare Project No. 23153.03



Locus Map

Scale: 1"=500'

PARE CORPORATION
www.parecorp.com

JON PAUL NANNI II
No. 15205
REGISTERED PROFESSIONAL ENGINEER
CIVIL
15 JULY 2026

JULY 2026

REAGAN MARINE CONSTRUCTION

Narragansett DockWorks

REVISIONS		
NO.	DESCRIPTION	DATE
A	60% SUBMISSION IFCR	3/9/2026
B	ISSUED FOR RICRMC	3/10/2026
C	ISSUED FOR USACE PERMIT	3/20/2026
D	90% SUBMISSION IFCR	4/10/2026
E	ISSUED FOR BUILDING PERMIT	4/24/2026
F	100% ISSUED FOR CLIENT REVIEW	7/20/2026
G	ISSUED FOR RICRMC PERMIT	7/29/2026

ISSUED FOR PERMIT
NOT FOR CONSTRUCTION
IF PRINTED 11X17 DRAWING IS HALF SIZE

RECEIVED
8/12/2026
COASTAL RESOURCES MANAGEMENT COUNCIL

© 2023 ALL INFORMATION THESE DOCUMENTS BY PARE CORPORATION

V:\JOBS\23_Jobs\23153.01 RIDOT Galilee Phase 5, NOW-Beyond\08-Bid\DWG\Pier 'KK'\GKK-001 COVER SHEET.dwg

GENERAL NOTES:

1. FOR THE PURPOSE OF THIS PROJECT

   OWNER - DEPARTMENT OF ENVIRONMENTAL MANAGEMENT, STATE OF RHODE ISLAND
   235 PROMENADE STREET, FL. 3
   PROVIDENCE, RI 02908

   ENGINEER - PARE CORPORATION
   10 LINCOLN ROAD, SUITE 210
   FOXBORO, MA 02035

   CONTACT - TODD D TURCOTTE, PE

2. ALL CONSTRUCTION INDICATED ON THESE PLANS SHALL BE PERFORMED IN ACCORDANCE WITH THE LATEST EDITION OF THE RHODE ISLAND STATE BUILDING CODE, ALL FEDERAL AND MUNICIPAL BUILDING CODES, AND THE SPECIFICATIONS INCLUDED IN THIS CONTRACT.

3. THE PROJECT SITE IS A WORKING COMMERCIAL FISHING PORT WITH LIMITED SHORESIDE ACCESS. THE CONTRACTOR SHALL COORDINATE WITH THE OWNER TO REDUCE THE IMPACT TO FISHING OPERATIONS.

4. CONTRACTOR IS SOLELY RESPONSIBLE FOR MEANS, METHODS, AND SAFETY OF WORK.

5. THE CONTRACTOR SHALL COORDINATE ALL ACTIVITIES WITH THE LEASE TENANTS THAT WILL BE IMPACTED BY DEMOLITION AND CONSTRUCTION, INCLUDING TEMPORARY REMOVAL AND REPLACEMENT OF ANY EQUIPMENT OR MATERIALS OWNED BY THE TENANTS THAT WILL BE AFFECTED BY THE WORK. (OWNER WILL BE NOTIFIED OF ANY WORK REQUIRED BY LEASE HOLDER IN ORDER FOR CONTRACTOR TO PERFORM WORK)

6. HORIZONTAL DATUM: RHODE ISLAND STATE PLANE - NAD83
   VERTICAL DATUM: NORTH AMERICAN VERTICAL DATUM - NAVD88

7. THE CONTRACTOR SHALL BE RESPONSIBLE FOR VERIFYING ALL DIMENSIONS. PLANS SHALL NOT BE SCALED FOR DIMENSIONS.

8. NOTES, TYPICAL DETAILS, AND SCHEDULES APPLY TO ALL WORK UNLESS OTHERWISE NOTED. FOR CONDITIONS NOT SPECIFICALLY SHOWN, PROVIDE DETAILS OF SIMILAR NATURE.

9. THE CONTRACTOR SHALL BE RESPONSIBLE FOR DISPOSAL OF ALL PROJECT DEMOLITION AND EXCESS MATERIAL IN ACCORDANCE WITH RHODE ISLAND, LOCAL, AND FEDERAL LAWS.

10. THE CONTRACTOR SHALL PROTECT ALL ADJACENT STRUCTURES AND UTILITIES.

11. THE CONTRACTOR SHALL FOLLOW ALL OSHA, FEDERAL, STATE, AND LOCAL STANDARDS. THE CONTRACTOR SHALL BE SOLELY RESPONSIBLE FOR ALL SITE SAFETY PROCEDURES AND PRACTICES REGARDLESS OF THE PRESENCE OF THE OWNER OR ENGINEER.

12. THE CONTRACTOR WILL SUBMIT A CONSTRUCTION SCHEDULE TO THE OWNER. THE CONTRACTOR WILL UPDATE SCHEDULE AS NEEDED THROUGHOUT THE COURSE OF WORK.

13. THE CONTRACTOR SHALL STAGE ALL EQUIPMENT IN THE DESIGNATED STAGING AREA(S). ALL GREASING AND REFUELING ACTIVITIES SHALL OCCUR IN THE STAGING AREA(S). ALL NECESSARY MEASURES SHALL BE TAKEN TO PREVENT BY ANY METHOD, OIL, CONSTRUCTION DEBRIS, STOCKPILED MATERIALS, AND OTHER MATERIALS ON THE SITE, FROM ENTERING THE WATERWAY. STAGING/LAYDOWN AREAS SHALL BE RESTORED BY THE CONTRACTOR TO THE EXISTING CONDITION. IN ADDITION, THE CONTRACTOR SHALL REPLACE ALL DAMAGED MATERIALS AS A RESULT OF HIS OPERATIONS, TO THE SATISFACTION OF THE ENGINEER.

14. THE CONTRACTOR SHALL TAKE ALL NECESSARY PRECAUTIONS TO PREVENT ALL CONSTRUCTION DEBRIS OR WASTE FROM FALLING INTO THE WATER. ANY DEBRIS FALLING INTO THE WATER SHALL BE RECOVERED AND PROPERLY DISPOSED OF.

15. THE CONTRACTOR SHALL MAINTAIN A SECURE SITE AND PROVIDE APPROPRIATE SAFETY MEASURES TO PREVENT ACCIDENTS. THE SAFETY MEASURES SHALL INCLUDE, BUT NOT BE LIMITED TO SIGNAGE, BARRICADES, FENCES, FLASHING WARNING LIGHTS, AND POLICING IF NECESSARY.

16. UPON COMPLETION OF THE PROJECT, CONTRACTOR DESIGN BUILDER WILL PROVIDE TWO AS-BUILT PLAN SETS, ONE ELECTRONIC PDF, AND ONE HARD COPY, TO THE OWNER DEPICTING ANY FIELD CHANGES OF DIMENSION OR DETAIL, LOCATION OF UNDERGROUND STRUCTURES AND/OR UTILITIES, CONSTRUCTION DEVIATIONS, CHANGES DUE TO FIELD OR CHANGE ORDER, AND DETAILS NOT ON THE ORIGINAL DRAWINGS.

17. THE PROJECT LIMITS ARE LOCATED WITHIN THE FEMA FLOOD ZONE VE EL. 15 AND WILL BE INUNDATED DURING THE 100-YR STORM AS SHOWN ON THE WASHINGTON COUNTY FLOOD INSURANCE RATE MAP (FIRM), PANEL 194 OF 386, MAP NUMBER 44009C0194J, EFFECTIVE ON OCT. 16, 2013

GENERAL SCOPE OF WORK

1. PRIOR TO PROJECT COMMENCEMENT, DESIGN BUILDER AND OWNER WILL NOTIFY AND COORDINATE WITH ALL STATE, LOCAL AND FEDERAL AUTHORITIES AS REQUIRED.

2. MOBILIZE CONSTRUCTION EQUIPMENT AND PERSONNEL TO THE SITE. UTILIZATION OF OFFSITE STAGING AREA WILL BE COORDINATED WITH THE OWNER AS APPROPRIATE AND AS NECESSARY. INSTALL EROSION CONTROLS.

3. PREVIOUS PIER TO BE DEMOLISHED AND REMOVED. PILES SHALL BE FULLY EXTRACTED; IF NOT FEASIBLE, PILES LEFT IN PLACE SHALL BE CUT AT THE MUDLINE.

4. LAYOUT THE PRELIMINARY ALIGNMENT OF PILES SUCH THAT THE PROPOSED NORTHERN EDGE OF PIER IS ALIGNED WITH THE EXISTING NORTHERN EDGE.

5. DRIVE NEW TIMBER SUPPORT PILES TO THE SPECIFIED DEPTH AS INDICATED ON SHEET SKK-102.

6. INSTALL L ANGLE ON EXISTING CONCRETE BULKHEAD.

7. INSTALL NEW TIMBER PIER FRAMING AS INDICATED ON THE DRAWINGS.

8. INSTALL DECKING ON TOP OF INSTALLED STRINGERS.

9. INSTALL FENDER SYSTEM, END PILE CLUSTERS, AND DOLPHIN CLUSTER.

10. DEMOBILIZE AND RETURN DISTURBED AREAS OF THE SITE TO PRE-CONSTRUCTION CONDITIONS.

SEDIMENT AND EROSION CONTROL NOTES

1. CONTRACTOR SHALL MAINTAIN ALL EROSION CONTROL DEVICES FOR THE DURATION OF THE PROJECT.

2. CONTRACTOR SHALL PREVENT SEDIMENT FROM ENTERING THE WATERWAY VIA DISCHARGES THROUGH ANY DRAINAGE STRUCTURES OR RUNOFF FROM WITHIN THE LIMITS OF WORK.

3. CONTRACTOR SHALL BE RESPONSIBLE FOR REMOVING, RESTORING AND REPAIRING ALL DAMAGE AS A RESULT OF UNAUTHORIZED WORK OR DISCHARGES AT NO ADDITIONAL COST TO THE OWNER.

4. SOIL STOCKPILES SHALL BE A MINIMUM OF 2-FEET FROM THE EDGE OF THE BULKHEAD TO LIMIT RUNOFF INTO THE HARBOR.

5. DISCHARGE OF TURBID WATER TO THE WATERWAY IS PROHIBITED.

STRUCTURAL TIMBER NOTES

1. TIMBER DESIGNATED AS TREATED SHALL BE PRESSURE TREATED IN ACCORDANCE WITH RHODE ISLAND STATE BUILDING CODE.

2. STRUCTURAL DESIGN IS BASED ON SOUTHERN YELLOW PINE KD-19 WITH MINIMUM REFERENCE DESIGN VALUES AS SPECIFIED BY THE AWC 2024 NDS SUPPLEMENTAL DESIGN VALUES FOR WOOD CONSTRUCTION. THESE DESIGN VALUES ARE PROVIDED IN THE TABLE AVAILABLE AT THE BOTTOM OF THIS SHEET:

3. ALL TIMBER FRAMING MEMBERS SHALL BE ROUGH SAWN UNLESS OTHERWISE NOTED.

4. ALL NAILING REQUIREMENTS LISTED ARE BASED UPON THE USE OF COMMON WIRE NAILS (NOT SINKERS, BOX, ETC.), ALTERNATIVE NAIL TYPES OF EQUIVALENT DIAMETERS MAY BE SUBSTITUTED, WITH PRIOR APPROVAL OF THE ENGINEER OF RECORD.

5. ALL BOLTS, NUTS, WASHERS, LAGS, SCREWS, AND DRIFT PINS SHALL BE MEDIUM CARBON STEEL WITH GALVANIZED COATING. SIZE AND TYPE TO SUIT APPLICATION IN CONFORMANCE WITH ASTM A153.

6. BRUSH OR ROLLER APPLY TWO COATS OF WOOD PRESERVATIVE TO ANY SURFACE WHICH HAS BEEN FIELD CUT, DRESSED, OR DRILLED.

7. ALL LUMBER SHALL BE STAMPED WITH PROVIDED TREATMENT AND USE CATEGORY.

TIMBER PILE NOTES

1. ALL TIMBER PILES ARE TO BE GREENHEART TIMBER PILES WITH A MINIMUM DIAMETER RANGING BETWEEN 12 AND 14-INCHES, 3 FEET FROM BUTT

   1.1. BENDING STRESS = 20,000 PSI
   1.2. MODULUS OF ELASTICITY = 3,000 KSI
   1.3. MAXIMUM CRUSHING STRENGTH = 10,500 PSI

2. GREENHEART PILES TO HAVE TWO STAINLESS STEEL BANDS AT TOP OF PILE AS INDICATED ON STANDARD/MISC. DETAILS.

3. CONTRACTOR SHALL BE RESPONSIBLE FOR MAINTAINING A PILE DRIVING LOG OF DRIVEN DEPTHS AND WILL BE RESPONSIBLE FOR REPORTING ANY PILE OR SET OF PILES NOT MEETING DESIGN REQUIREMENTS AS STATED ON THE SET OF PLANS

SPILL PREVENTION AND CONTROL NOTES

1. SPILLS AND LEAKS SHALL BE AVOIDED THROUGH FREQUENT INSPECTION OF EQUIPMENT AND MATERIAL STORAGE AREAS, AND SHALL BE REMEDIATED AND REPAIRED AS NECESSARY.

2. HAZARDOUS MATERIAL STORAGE TO BE PLACED ONLY IN DESIGNATED AREAS. MATERIAL STORAGE AREAS SHALL BE ROUTINELY INSPECTED FOR LEAKY CONTAINERS, OPEN CONTAINERS, OR IMPROPER STORAGE TECHNIQUES THAT MAY LEAD TO SPILLS OR LEAKS.

3. APPROPRIATE SPILL REMEDIATION PROCEDURES AND SUPPLIES SHALL BE READILY AVAILABLE ON-SITE. TOOLS AND SUPPLIES SHALL BE CLEARLY MARKED SO THAT ALL PERSONNEL CAN LOCATE AND ACCESS THESE SUPPLIES.

4. SPILL REMEDIATION SHALL BE PERFORMED IMMEDIATELY. CONTRACTOR SHALL FOLLOW PROPER RESPONSE PROCEDURES IN ACCORDANCE WITH ANY APPLICABLE REGULATORY REQUIREMENTS.

5. AT NO TIME SHALL SPILLS BE DIVERTED TOWARD STORM DRAINS OR TO THE WATERWAY.

6. EQUIPMENT/VEHICLE FUELING AND REPAIR/MAINTENANCE OPERATIONS SHALL TAKE PLACE ONLY WITHIN DESIGNATED STAGING AREAS.

7. THE EQUIPMENT OPERATOR SHALL FULLY MONITOR FUELING OPERATIONS TO EQUIPMENT AND VEHICLES AT ALL TIMES.

8. ANY SPILLAGE SHALL BE IMMEDIATELY CLEANED WITH SPILL KITS KEPT ON SITE.

9. IN THE CASE OF SMALL AMOUNTS OF SOIL CONTAMINATION, SUCH SOIL SHALL BE PLACED IN 55 GALLON DRUMS FOR DISPOSAL BY A LICENSED HAZARDOUS WASTE HAULER.

10. IN THE CASE OF A LARGE AMOUNT OF SOIL CONTAMINATION OR DISCHARGE TO THE WATERWAY, RHODE ISLAND DEM AND APPLICABLE AGENCIES SHALL BE NOTIFIED AS REQUIRED. A HAZARDOUS WASTE REMEDIATION FIRM SHALL BE CONTRACTED TO REMOVE AND DISPOSE OF THE CONTAMINATED MATERIAL OR CONTAIN THE SPILL AT NO ADDITIONAL COST.

COMPONENT	GRADE	DRESSED	BENDING Fb (PSI)	SHEAR Fv (PSI)	COMPRESSION PERP. TO GRAIN Fc (PSI)	COMPRESSION PAR. TO GRAIN Fc (PSI)	USE CATEGORY	TREATMENT
6x12 SPLIT CAP AND STRINGERS*	GRADE 1	RGH	1350	165	375	825	UC4B	0.60 CCA
10x12 CHOCK *	GRADE 2	RGH	850	165	375	825	UC4B	0.60 CCA
4x10 CROSS BRACING	GRADE 1	RGH	1050	175	565	N/A	UC4B	2.5 CCA
4x10 DECKING	GRADE 2	S4S	1050	175	565	N/A	UC4A	0.23 MCA

* WET SERVICE CONDITION

DESIGN LOADS

PIER LOADINGS

1. BERTHING AND MOORING LOADS

A.	L (FT)	81
B.	BM (FT)	26
C.	DRAFT (FT)	15
D.	GW (TONS, US)	193
E.	DT (ASSUMED)(TONS, US)	330
F.	SAIL AREA (SF)	41,979
G.	CLASS	
H.	NAME	
I.	TYPE	FISHING VESSEL
J.	DESIGN DREDGE DEPTH, MAX (FT)	15
K.	WATER DENSITY (PCF)	64
L.	WIND SPEED (MPH)	94
M.	DESIGN FETCH (NM)	
N.	BERTHING CONDITION	GOOD
O.	BERTHING EXPOSURE	EXPOSED
P.	VELOCITY (FT/SEC)	0.5
Q.	BERTHING ENERGY (KIP-FT)	1.1

2. VERTICAL LOADS

A.	PIER DESIGN LIVE LOAD (PSF)	250
B.	GROUND SNOW LOAD (PSF)	30
C.	DEAD LOAD (PSF)	SELF WEIGHT OF TIMBER MEMBERS

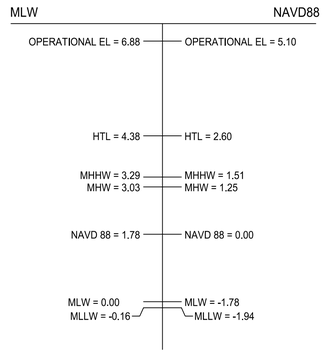

DATUM INFORMATION

INTERPOLATED BASED ON
PT. JUDITH 8455083 & NEWPORT 8452660 STATIONS
ALL FIGURES IN FEET

ISSUED FOR PERMIT
NOT FOR CONSTRUCTION
IF PRINTED 11X17 DRAWING IS HALF SIZE

RECEIVED
8/12/2026
COASTAL RESOURCES MANAGEMENT COUNCIL

REAGAN MARINE CONSTRUCTION
Narragansett DockWorks

PARE
PARE CORPORATION
www.parecorp.com

SCALE ADJUSTMENT GUIDE
0" 1"
BAR IS ONE INCH ON ORIGINAL DRAWING

PIER 'KK' REMOVAL AND REPLACEMENT
PORT OF GALILEE: PHASE V
NARRAGANSETT, RHODE ISLAND
RHODE ISLAND
DEPARTMENT OF ENVIRONMENTAL MANAGEMENT

JON PAUL NANNI II
No. 15205
REGISTERED PROFESSIONAL ENGINEER
CIVIL
15 July 2026

REVISIONS:		
D	4/10/2026	90% IFCR
E	4/24/2026	BUILDING PERMIT
F	7/20/2026	100% IFCR
G	7/29/2026	RICRMC PERMIT

PROJECT NO.:	23153.03
DATE:	JULY 2026
SCALE:	AS NOTED
DESIGNED BY:	TJD
CHECKED BY:	JPN
DRAWN BY:	TJD
APPROVED BY:	TDT

DRAWING TITLE:
GENERAL NOTES

DRAWING NO.:
GKK-002

SHEET NO. 2 OF 13

V:\23153_23153.03 PIER KK GALILEE PHASE V_NON-RE\GAA\DB-REVIS\PIER KK\GKK-001 GENERAL NOTES 2.DWG

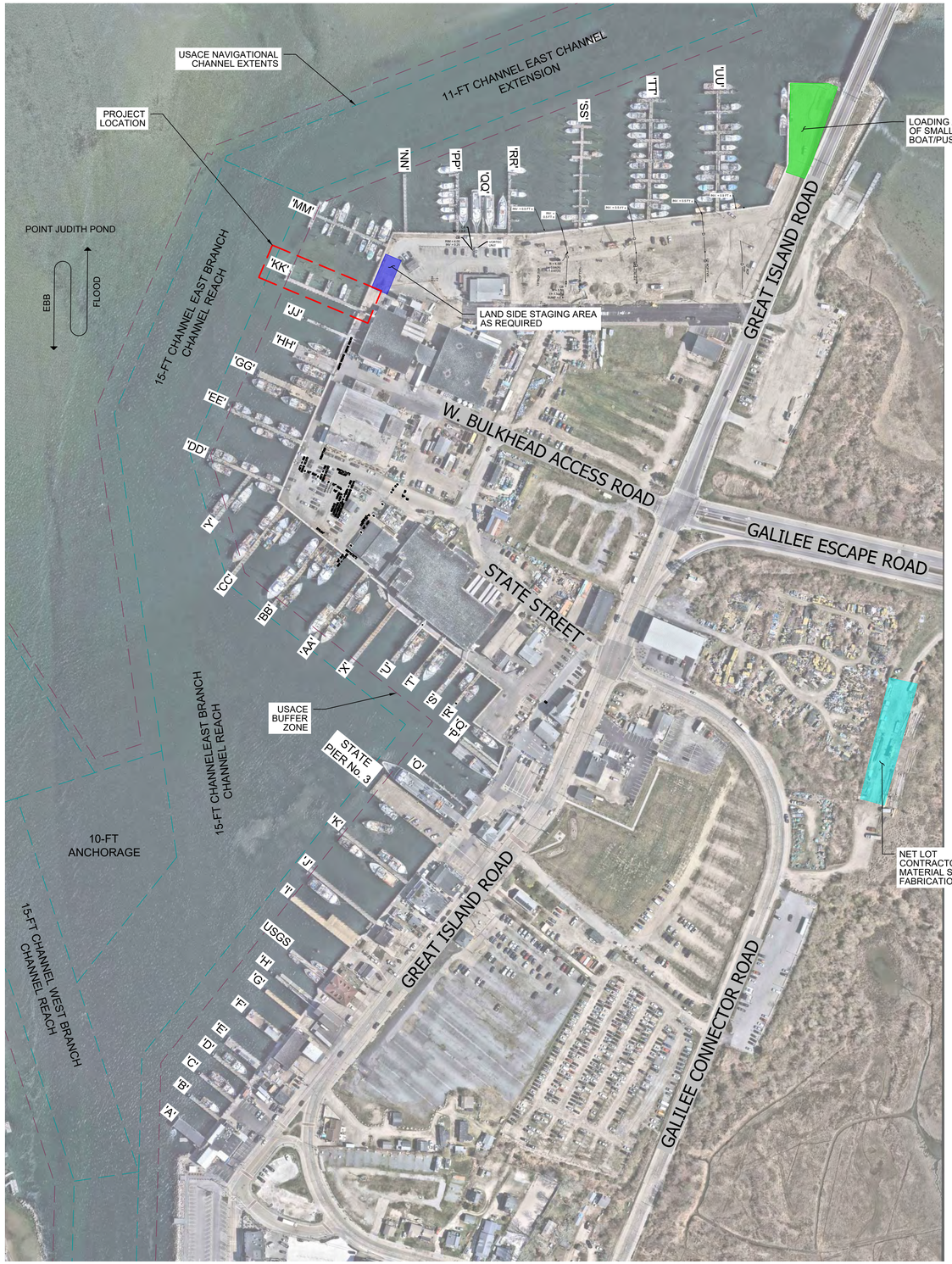

CONSTRUCTION ACCESS PLAN

SCALE: 1"=150'

LEGEND

EXISTING

NOT ALL ITEMS SHOWN WILL APPEAR ON THE SURVEY

BUILDING	
ASPHALT	
AP	ASSESSOR'S PLAT
N/F	NOW OR FORMERLY
(D)	DEED
(M)	MEASURED
(C)	CALCULATED
(CA)	CHORD ANGLE
HC	HANDICAPPED
T.O.C.	TOP OF CAP
	PROPERTY LINE
	ASSESSORS LINE
	TREELINE
	GUARDRAIL
	FENCE
	STEEL SHEET PILE
	STONE WALL
2	MINOR CONTOUR LINE
10	MAJOR CONTOUR LINE
W	WATER LINE
S	SEWER LINE
SFM	SEWER FORCE MAIN
G	GAS LINE
E	ELECTRIC LINE
OHW	OVERHEAD WIRES
D	DRAINAGE LINE
△/▲	NAIL FOUND/SET
◉/●	DRILL HOLE FOUND/SET
●/●	IRON ROD/PIPE FOUND/SET
■/■	BOUND FOUND/SET
	SIGN
	BOLLARD
	SOIL EVALUATION
CB	CATCH BASIN
DCB	DOUBLE CATCH BASIN
DMH	DRAINAGE MANHOLE
FES	FLARED END SECTION
	GUY POLE
EMH	ELECTRIC MANHOLE/HANDHOLE
UP	UTILITY/POWER POLE
	LIGHTPOST
SMH	SEWER/SEPTIC MANHOLE
	SEWER VALVE
	CLEANOUT
	HYDRANT
	IRRIGATION VALVE
	WATER VALVE
	WELL
	MONITORING WELL
	UNKNOWN MANHOLE
	GAS VALVE
B-1	WETLAND FLAG
	BORING
	BUSH
	TREE
	BENCH MARK
	TIMBER PILE

PROPOSED

LOD	LIMIT OF DISTURBANCE
FP	FIRE PROTECTION LINE
	EROSION CONTROL
	TEMPORARY CONSTRUCTION FENCE
	STEEL SHEET PILE WALL
	TIMBER PILE
	FLOOD/EBB DIRECTION
	PILE COLUMN NUMBERING INDEX
	PILE BENT NUMBERING INDEX
	WATER ELEVATION
	2 1/2" BRASS GR x NST BRASS ANGLE FIRE DEPARTMENT HOSE VALVE

ISSUED FOR PERMIT
NOT FOR CONSTRUCTION
IF PRINTED 11X17 DRAWING IS HALF SIZE

RECEIVED
8/12/2026
COASTAL RESOURCES MANAGEMENT COUNCIL

REAGAN MARINE CONSTRUCTION

Narragansett DockWorks

PARE
PARE CORPORATION
www.parecorp.com

SCALE ADJUSTMENT GUIDE
0" 1"
BAR IS ONE INCH ON ORIGINAL DRAWING

PIER 'KK' REMOVAL AND REPLACEMENT
PORT OF GALILEE: PHASE V
NARRAGANSETT, RHODE ISLAND
RHODE ISLAND
DEPARTMENT OF ENVIRONMENTAL MANAGEMENT

JON PAUL NANNI II
No. 15205
REGISTERED PROFESSIONAL ENGINEER
CIVIL
15 July 2026

REVISIONS:		
D	4/10/2026	90% IFCR
E	4/24/2026	BUILDING PERMIT
F	7/20/2026	100% IFCR
G	7/29/2026	RICRMC PERMIT

PROJECT NO.:	23153.03
DATE:	JULY 2026
SCALE:	AS NOTED
DESIGNED BY:	TJD
CHECKED BY:	JPN
DRAWN BY:	TJD
APPROVED BY:	TDT

DRAWING TITLE:

CONSTRUCTION ACCESS PLAN

DRAWING NO.:

CKK-101

SHEET NO. 3 OF 13



EXISTING LOCATION PLAN

SCALE: 1"=20'

NOTES:

1. CONTROL POINTS TO BE FINALIZED IN FIELD ONCE EQUIPMENT BEHIND THE BULKHEAD IS REMOVED.
2. SEE SHEET CKK-103 FOR CONTROL POINT NORTHING AND EASTING.
3. BORINGS REFERENCE THE BORING LOCATION PLAN AND BORING LOGS COMPLETED BY GUILD DRILLING, INC. (1979).

STRUCTURAL PERIMETER LIMIT		
POINT	NORTHING	EASTING
SPL1	109000.4494	324889.7086
SPL2	109080.3189	324705.4053
SPL3	109136.7482	324729.8595
SPL4	109056.9801	324913.9290

REAGAN MARINE CONSTRUCTION

Narragansett DockWorks

PARE CORPORATION
www.parecorp.com

SCALE ADJUSTMENT GUIDE
0" 1"
BAR IS ONE INCH ON ORIGINAL DRAWING

PIER 'KK' REMOVAL AND REPLACEMENT
PORT OF GALILEE: PHASE V
NARRAGANSETT, RHODE ISLAND

RHODE ISLAND
DEPARTMENT OF ENVIRONMENTAL MANAGEMENT

JON PAUL NANNI II
No. 15205
REGISTERED PROFESSIONAL ENGINEER
CIVIL
09-JULY-2026

RECEIVED
8/12/2026
COASTAL RESOURCES MANAGEMENT COUNCIL

REVISIONS:

D	4/10/2026	90% IFCR
E	4/24/2026	BUILDING PERMIT
F	7/20/2026	100% IFCR
G	7/29/2026	RICRMC PERMIT

PROJECT NO.:	23153.03
DATE:	JULY 2026
SCALE:	AS NOTED
DESIGNED BY:	TJD
CHECKED BY:	JPN
DRAWN BY:	TJD
APPROVED BY:	TDT

DRAWING TITLE:

EXISTING LOCATION PLAN

DRAWING NO.:
CKK-102

SHEET NO. 4 OF 13

ISSUED FOR PERMIT
NOT FOR CONSTRUCTION
IF PRINTED 11X17 DRAWING IS HALF SIZE

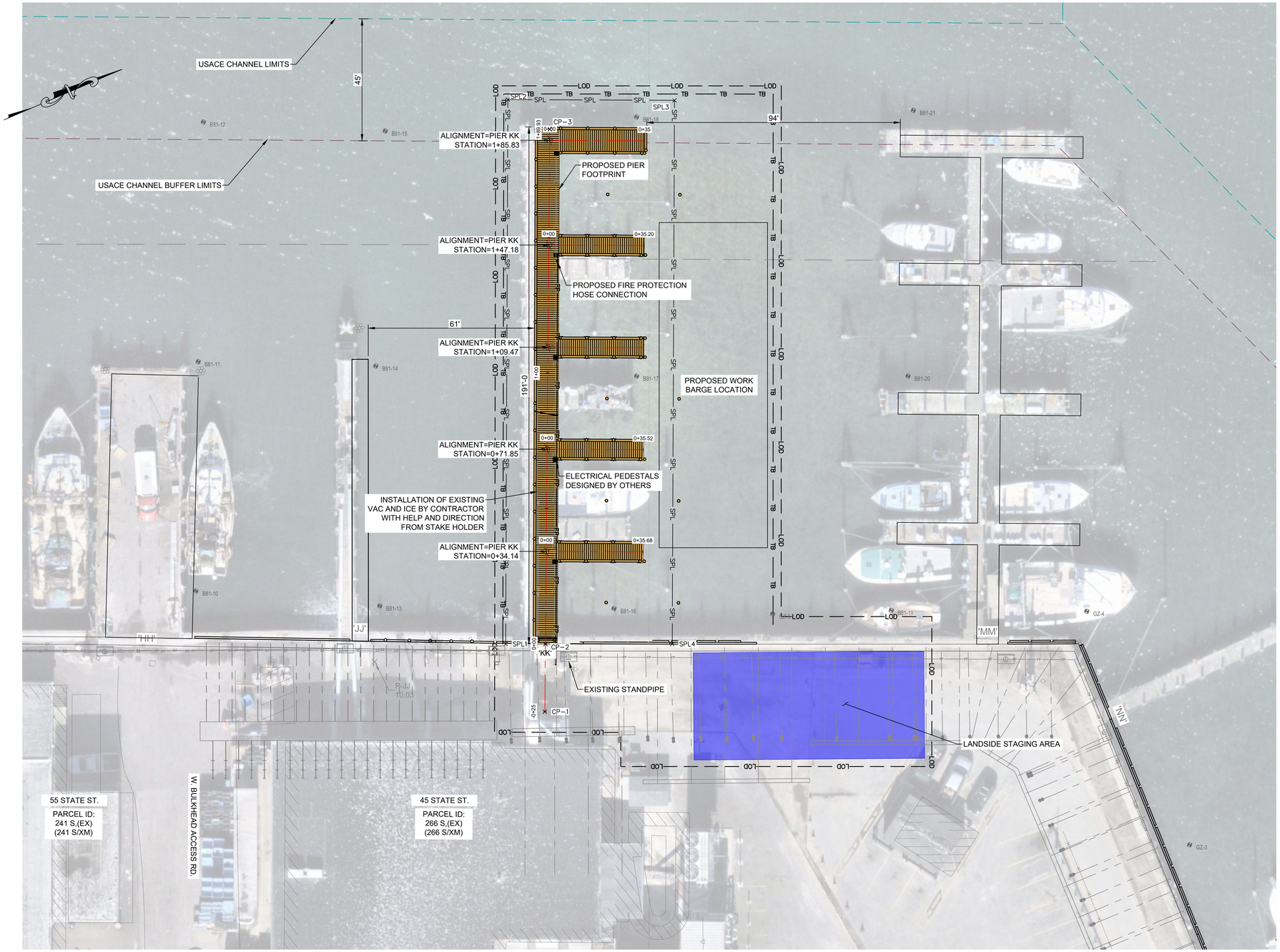

NOTES:

1. CONTROL POINTS TO BE FINALIZED IN FIELD ONCE EQUIPMENT BEHIND THE BULKHEAD IS REMOVED.

PROPOSED LOCATION PLAN

SCALE: 1" = 20'-0"

CONTROL POINTS		
POINT	NORTHING	EASTING
CP-1	109003.9207	324918.3893
CP-2	109013.9383	324895.5398
CP-3	109090.2180	324721.5514

REAGAN MARINE CONSTRUCTION

Narragansett DockWorks

PARE CORPORATION
www.parecorp.com

SCALE ADJUSTMENT GUIDE
0" 1"
BAR IS ONE INCH ON ORIGINAL DRAWING

PIER 'KK' REMOVAL AND REPLACEMENT
PORT OF GALILEE: PHASE V
NARRAGANSETT, RHODE ISLAND

RHODE ISLAND
DEPARTMENT OF ENVIRONMENTAL MANAGEMENT

JON PAUL NANNI II
No. 15205
REGISTERED PROFESSIONAL ENGINEER
CIVIL
25 JULY 2026

RECEIVED
8/12/2026
COASTAL RESOURCES MANAGEMENT COUNCIL

REVISIONS:

D	4/10/2026	90% IFCR
E	4/24/2026	BUILDING PERMIT
F	7/20/2026	100% IFCR
G	7/29/2026	RICRMC PERMIT

PROJECT NO.:	23153.03
DATE:	JULY 2026
SCALE:	AS NOTED
DESIGNED BY:	TJD
CHECKED BY:	JPN
DRAWN BY:	TJD
APPROVED BY:	TDT

DRAWING TITLE:

PROPOSED LOCATION PLAN

DRAWING NO.:
CKK-103

SHEET NO. 5 OF 13

ISSUED FOR PERMIT
NOT FOR CONSTRUCTION
IF PRINTED 11X17 DRAWING IS HALF SIZE

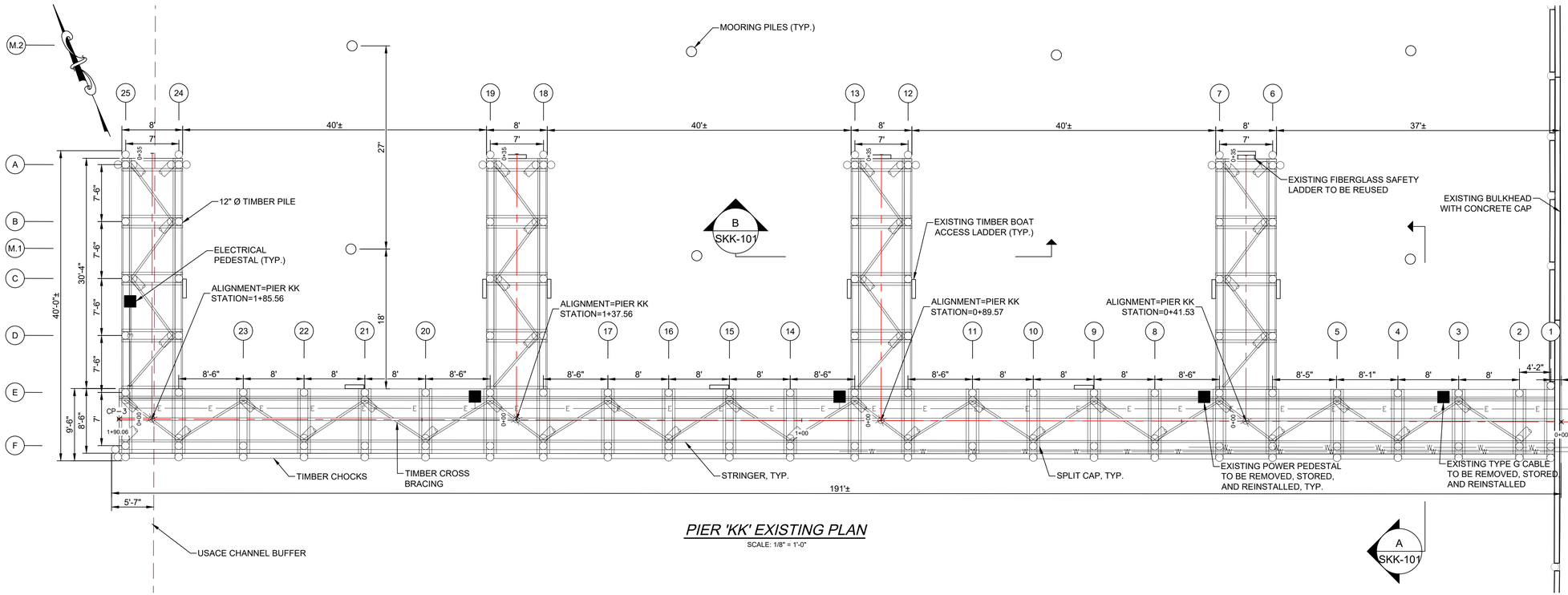

PIER 'KK' EXISTING PLAN

SCALE: 1/8" = 1'-0"

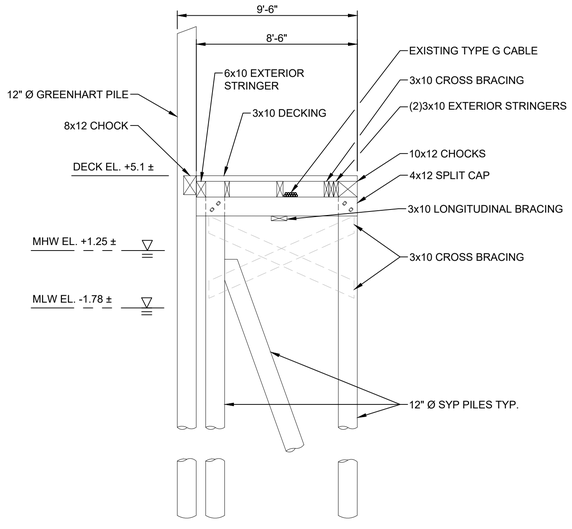

A SKK-101 — PIER 'KK' EXISTING MAIN PIER SECTION

SCALE: 1/4" = 1'-0"

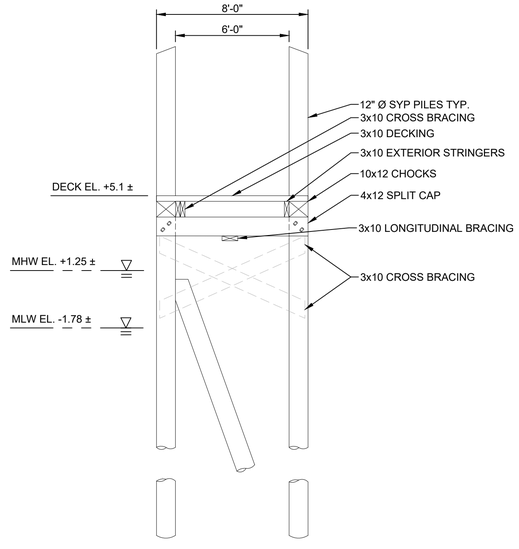

B SKK-101 — PIER 'KK' EXISTING FINGER PIER SECTION

SCALE: 1/4" = 1'-0"

ISSUED FOR PERMIT
NOT FOR CONSTRUCTION
IF PRINTED 11X17 DRAWING IS HALF SIZE

REAGAN MARINE CONSTRUCTION

Narragansett DockWorks

PARE
PARE CORPORATION
www.parecorp.com

SCALE ADJUSTMENT GUIDE
0" 1"
BAR IS ONE INCH ON ORIGINAL DRAWING

PIER 'KK' REMOVAL AND REPLACEMENT
PORT OF GALILEE: PHASE V
NARRAGANSETT, RHODE ISLAND
RHODE ISLAND
DEPARTMENT OF ENVIRONMENTAL MANAGEMENT

JON PAUL NANNI II
No. 15205
REGISTERED PROFESSIONAL ENGINEER
CIVIL
31-July-2026

RECEIVED 8/12/2026 COASTAL RESOURCES MANAGEMENT COUNCIL

REVISIONS:		
D	4/10/2026	90% IFCR
E	4/24/2026	BUILDING PERMIT
F	7/20/2026	100% IFCR
G	7/29/2026	RICRMC PERMIT

PROJECT NO.:	23153.03
DATE:	JULY 2026
SCALE:	AS NOTED
DESIGNED BY:	TJD
CHECKED BY:	JPN
DRAWN BY:	TJD
APPROVED BY:	TDT

DRAWING TITLE:
EXISTING PIER PLAN AND SECTION

DRAWING NO.:
SKK-101

SHEET NO. 6 OF 13

V:\2023\23153.03 RIDEM GALILEE PHASE 2_NEW\REAGAN DB\REVISED\PIER 'KK'\SKK-101 EXISTING PIER PLAN AND SECTION.DWG

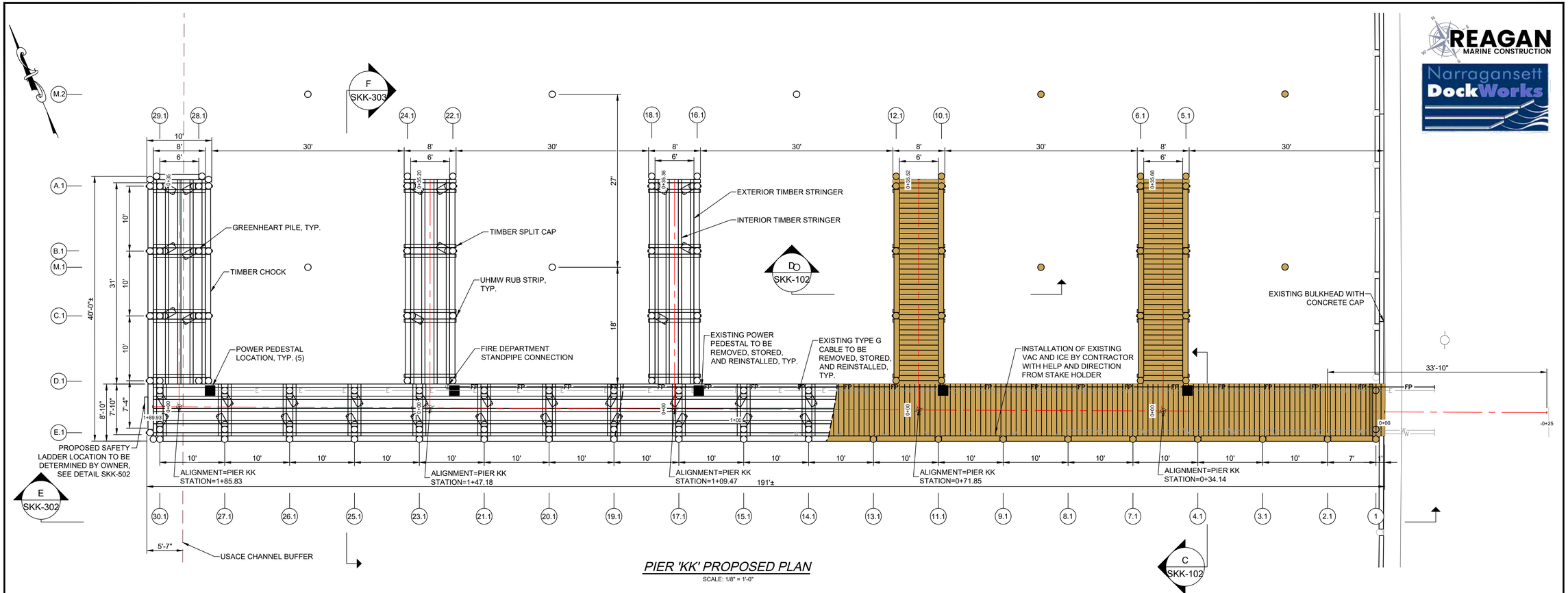

PIER 'KK' PROPOSED PLAN

SCALE: 1/8" = 1'-0"

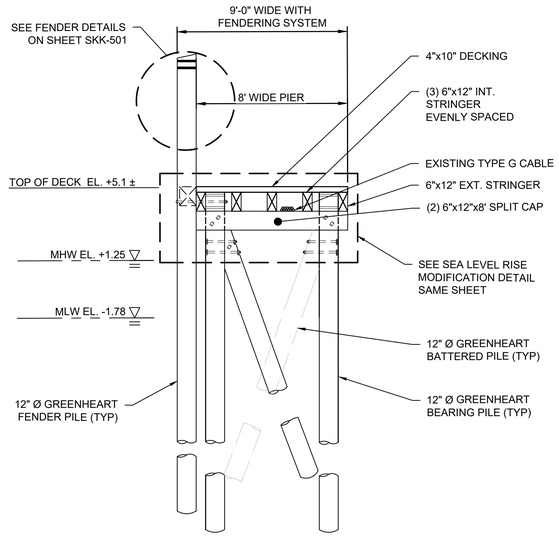

C SKK-102 — PIER 'KK' MAIN PROPOSED SECTION

SCALE: 1/4" = 1'-0"

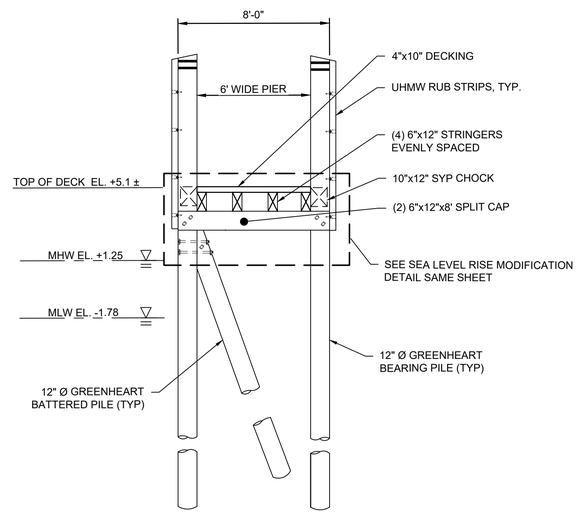

D SKK-102 — PIER 'KK' FINGER PROPOSED SECTION

SCALE: 1/4" = 1'-0"

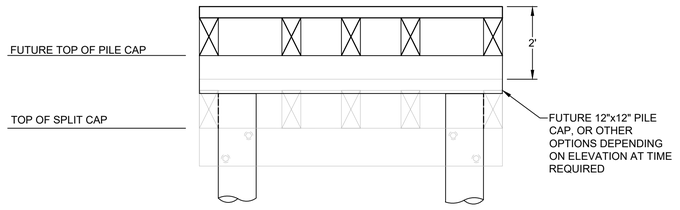

PROPOSED FUTURE SEA LEVEL RISE MODIFICATIONS TO PIER CAP

SCALE: 1/2" = 1'-0"

NOTES:

1. SUPPORT PILES TO BE LEFT HIGH, ± BOTTOM OF DECKING ELEVATION, FOR FUTURE SEA LEVEL RISE MODIFICATION

ISSUED FOR PERMIT
NOT FOR CONSTRUCTION
IF PRINTED 11X17 DRAWING IS HALF SIZE

REAGAN MARINE CONSTRUCTION

Narragansett DockWorks

PARE
PARE CORPORATION
www.parecorp.com

SCALE ADJUSTMENT GUIDE
0" 1"
BAR IS ONE INCH ON ORIGINAL DRAWING

PIER 'KK' REMOVAL AND REPLACEMENT
PORT OF GALILEE: PHASE V
NARRAGANSETT, RHODE ISLAND
RHODE ISLAND
DEPARTMENT OF ENVIRONMENTAL MANAGEMENT

JON PAUL NANNI III
No. 15205
REGISTERED PROFESSIONAL ENGINEER
CIVIL
29-July-2026

RECEIVED
8/12/2026
COASTAL RESOURCES MANAGEMENT COUNCIL

REVISIONS:		
D	4/10/2026	90% IFCR
E	4/24/2026	BUILDING PERMIT
F	7/20/2026	100% IFCR
G	7/29/2026	RICRMC PERMIT

PROJECT NO.:	23153.03
DATE:	AUGUST 3, 2026
SCALE:	AS NOTED
DESIGNED BY:	TJD
CHECKED BY:	JPN
DRAWN BY:	TJD
APPROVED BY:	TDT

DRAWING TITLE:
PROPOSED PIER PLAN AND SECTION

DRAWING NO.:
SKK-102

SHEET NO. 7 OF 13

I:\23153.03\CAD\23153.03 REDM GALILEE PHASE 5_NARRAGANSETT DB-REAGAN\PIER KK\SKK-102 PROPOSED PIER PLAN AND SECTION.DWG

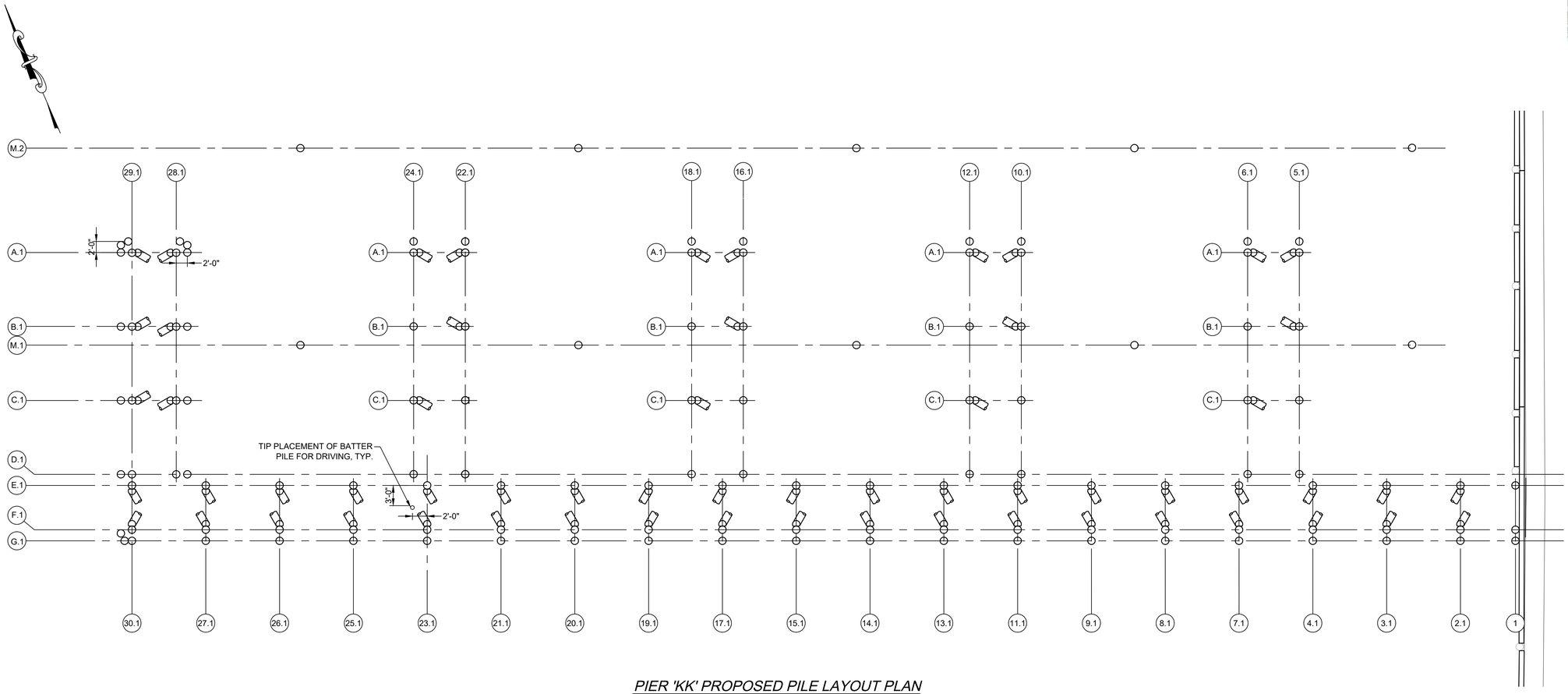

PIER 'KK' PROPOSED PILE LAYOUT PLAN

SCALE: 1/8" = 1'-0"

ISSUED FOR PERMIT
NOT FOR CONSTRUCTION
IF PRINTED 11X17 DRAWING IS HALF SIZE

REAGAN MARINE CONSTRUCTION

Narragansett DockWorks

PARE CORPORATION
www.parecorp.com

SCALE ADJUSTMENT GUIDE
0" 1"
BAR IS ONE INCH ON ORIGINAL DRAWING

PIER 'KK' REMOVAL AND REPLACEMENT
PORT OF GALILEE: PHASE V
NARRAGANSETT, RHODE ISLAND

RHODE ISLAND
DEPARTMENT OF ENVIRONMENTAL MANAGEMENT

JON PAUL NANNI II
No. 15205
REGISTERED PROFESSIONAL ENGINEER
CIVIL
15-JULY-2026

RECEIVED
8/12/2026
COASTAL RESOURCES MANAGEMENT COUNCIL

REVISIONS:

D	4/10/2026	90% IFCR
E	4/24/2026	BUILDING PERMIT
F	7/20/2026	100% IFCR
G	7/29/2026	RICRMC PERMIT

PROJECT NO.:	23153.03
DATE:	JULY 2026
SCALE:	AS NOTED
DESIGNED BY:	TJD
CHECKED BY:	JPN
DRAWN BY:	TJD
APPROVED BY:	TDT

DRAWING TITLE:

PROPOSED PILE LAYOUT PLAN

DRAWING NO.:
SKK-301

SHEET NO. 8 OF 13

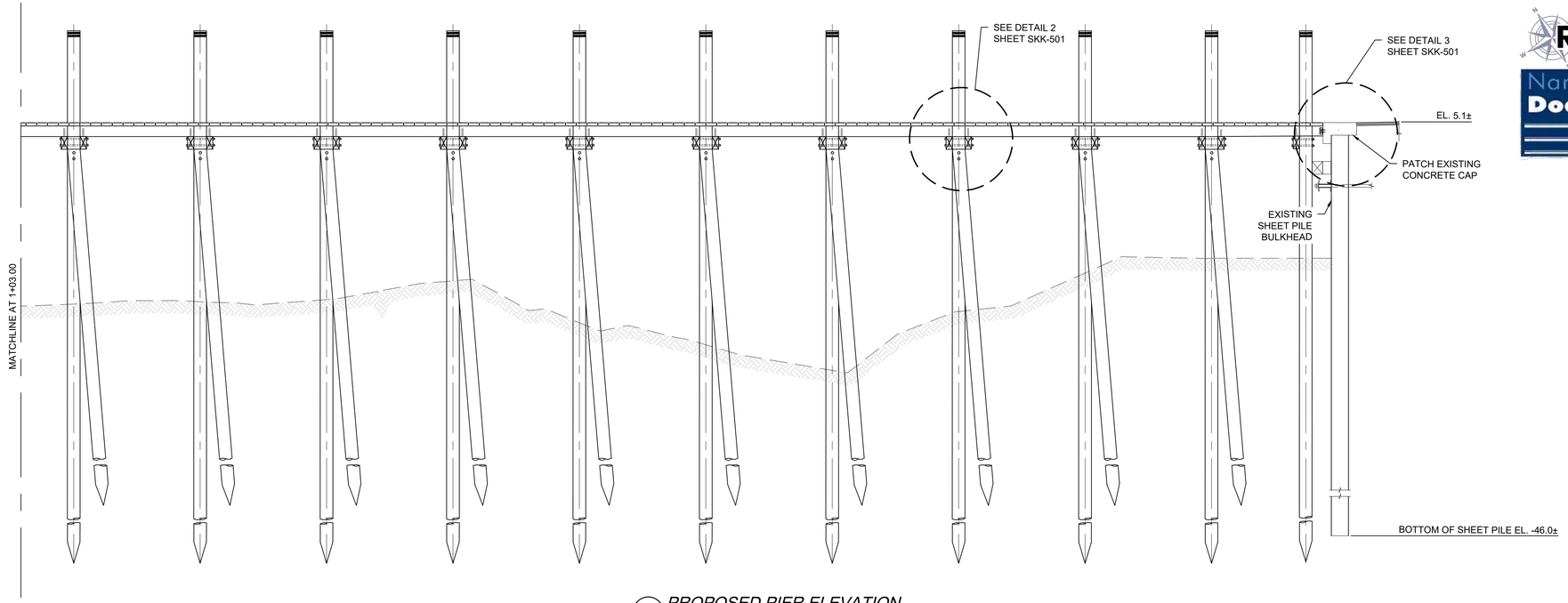

E SKK-102 PROPOSED PIER ELEVATION
SCALE: 3/16" = 1'-0"

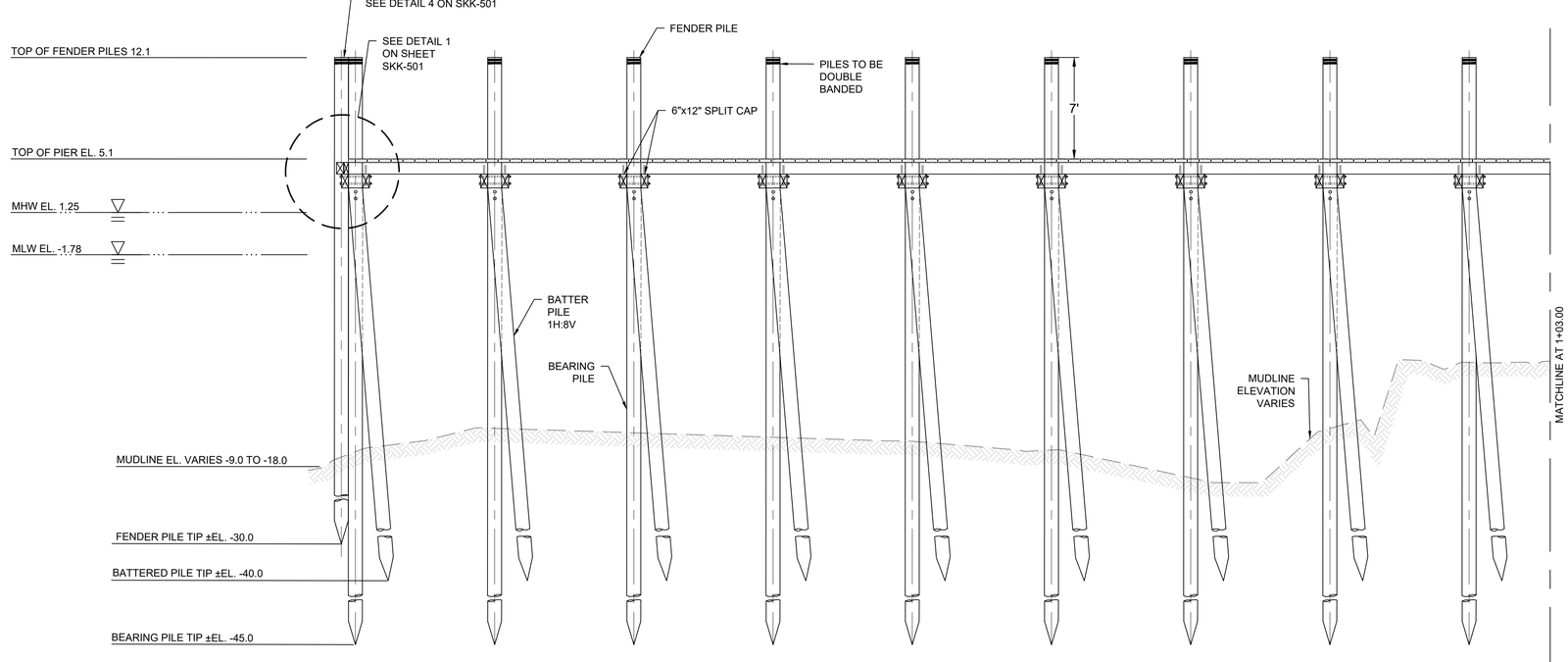

E SKK-102 PROPOSED PIER ELEVATION
SCALE: 3/16" = 1'-0"

NOTES:
1. BATHYMETRIC ELEVATION IS BASED ON 2018 USACE JOINT AIRBORNE LIDAR BATHYMETRY OBTAINED WITH NOAA DIGITAL COAST DATA ACCESS VIEWER.

ISSUED FOR PERMIT
NOT FOR CONSTRUCTION
IF PRINTED 11X17 DRAWING IS HALF SIZE

RECEIVED
8/12/2026
COASTAL RESOURCES MANAGEMENT COUNCIL

REAGAN MARINE CONSTRUCTION

Narragansett DockWorks

PARE
PARE CORPORATION
www.parecorp.com

SCALE ADJUSTMENT GUIDE
0" 1"
BAR IS ONE INCH ON ORIGINAL DRAWING

PIER 'KK' REMOVAL AND REPLACEMENT
PORT OF GALILEE: PHASE V
NARRAGANSETT, RHODE ISLAND

RHODE ISLAND
DEPARTMENT OF ENVIRONMENTAL MANAGEMENT

JON PAUL NANNI II
No. 15205
REGISTERED PROFESSIONAL ENGINEER
CIVIL
29-JULY-2026

REVISIONS:

D	4/10/2026	90% IFCR
E	4/24/2026	BUILDING PERMIT
F	7/20/2026	100% IFCR
G	7/29/2026	RICRMC PERMIT

PROJECT NO.:	23153.03
DATE:	JULY 2026
SCALE:	AS NOTED
DESIGNED BY:	TJD
CHECKED BY:	JPN
DRAWN BY:	TJD
APPROVED BY:	TDT

DRAWING TITLE:
PROPOSED PIER ELEVATION AND PILE PLAN

DRAWING NO.:
SKK-302

SHEET NO. 9 OF 13

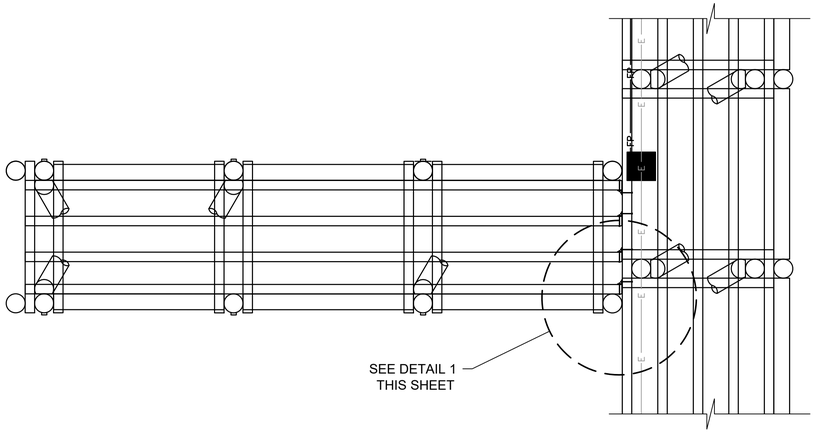

F SKK-102 **PROPOSED PIER PLAN VIEW**

SCALE: 1/4" = 1'-0"

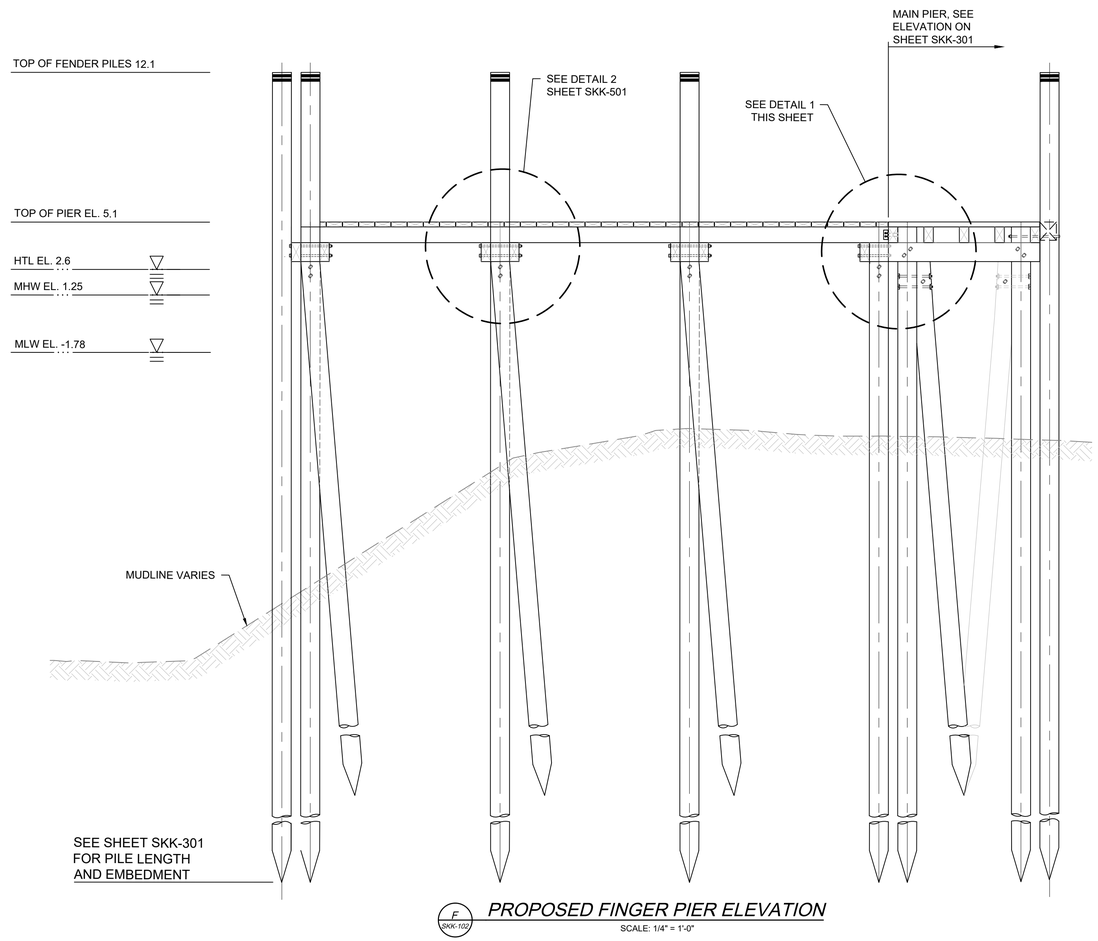

E SKK-102 **PROPOSED FINGER PIER ELEVATION**

SCALE: 1/4" = 1'-0"

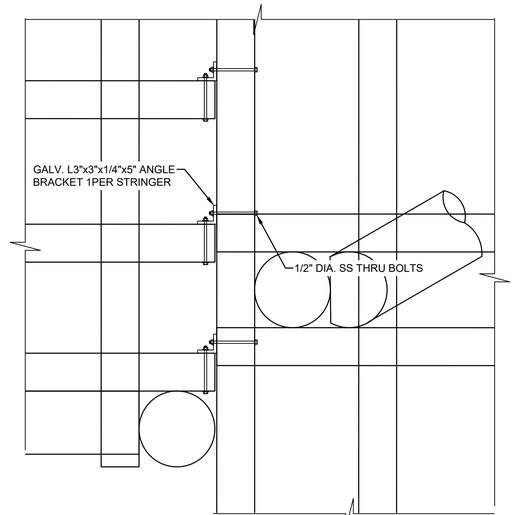

FINGER PIER CONNECTION DETAIL

SCALE: 1" = 1'-0"

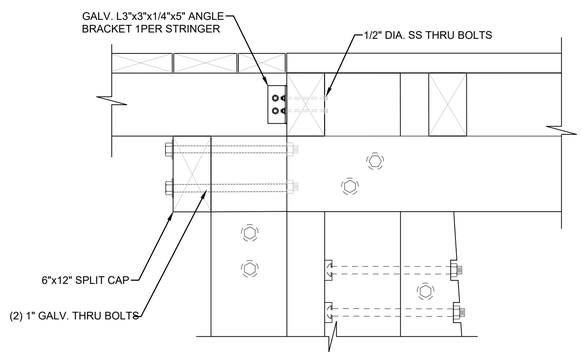

1 SKK-303 **FINGER PIER CONNECTION DETAIL**

SCALE: 1" = 1'-0"

ISSUED FOR PERMIT
NOT FOR CONSTRUCTION
IF PRINTED 11X17 DRAWING IS HALF SIZE

RECEIVED
8/12/2026
COASTAL RESOURCES MANAGEMENT COUNCIL

REAGAN MARINE CONSTRUCTION

Narragansett DockWorks

PARE
PARE CORPORATION
www.parecorp.com

SCALE ADJUSTMENT GUIDE
0" 1"
BAR IS ONE INCH ON ORIGINAL DRAWING

PIER 'KK' REMOVAL AND REPLACEMENT
PORT OF GALILEE: PHASE V
NARRAGANSETT, RHODE ISLAND
RHODE ISLAND
DEPARTMENT OF ENVIRONMENTAL MANAGEMENT

JON PAUL NANNI II
No. 15205
REGISTERED PROFESSIONAL ENGINEER
CIVIL
31 July 2026

REVISIONS:		
D	4/10/2026	90% IFCR
E	4/24/2026	BUILDING PERMIT
F	7/20/2026	100% IFCR
G	7/29/2026	RICRMC PERMIT

PROJECT NO.:	23153.03
DATE:	JULY 2026
SCALE:	AS NOTED
DESIGNED BY:	TJD
CHECKED BY:	JPN
DRAWN BY:	TJD
APPROVED BY:	TDT

DRAWING TITLE:

PROPOSED PIER ELEVATION AND PILE PLAN

DRAWING NO.:

SKK-303

SHEET NO. 10 OF 13

X:\JOBS\23153.03\Civil\23153.03 Pier KK Phase V.dwg, 7/29/2026 8:59:02 PM, JPN, 1:1, 1:1, 1:1

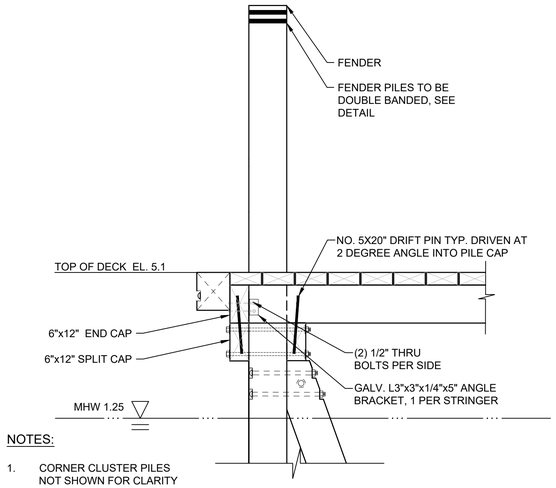

NOTES:

1. CORNER CLUSTER PILES NOT SHOWN FOR CLARITY

1 SKK-301 *TERMINUS BENT DETAIL*
SCALE: 1/2" = 1'-0"

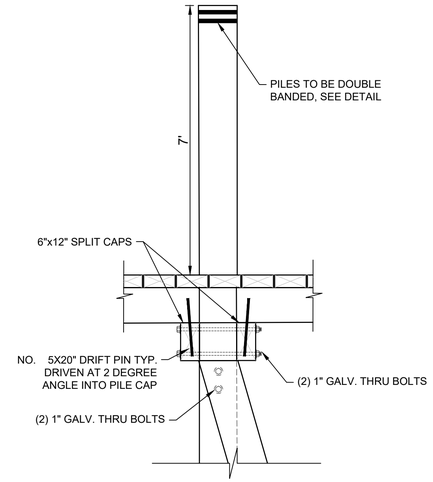

2 SKK-301 *PILE SPLIT CAP AND BEARING PILE*
SCALE: 1/2" = 1'-0"

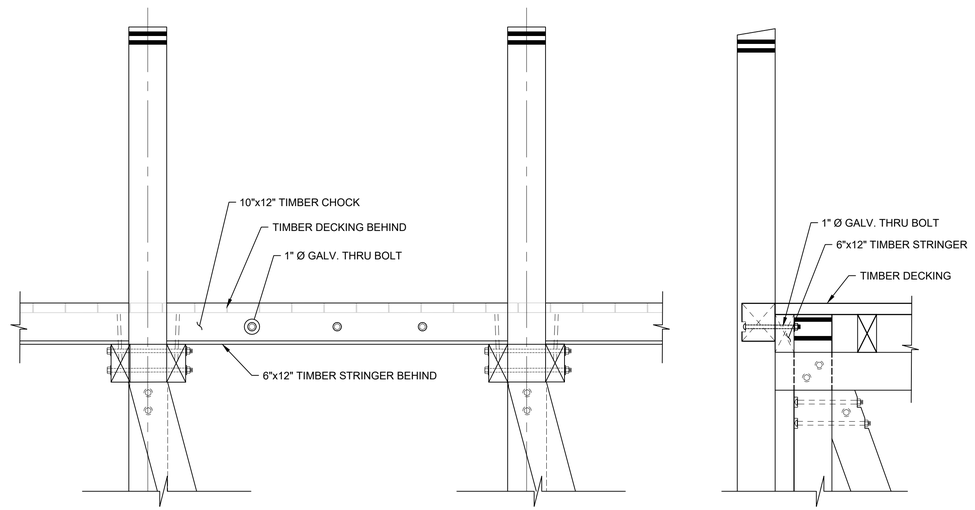

CHOCK CONNECTION DETAIL
SCALE: 1/2" = 1'-0"

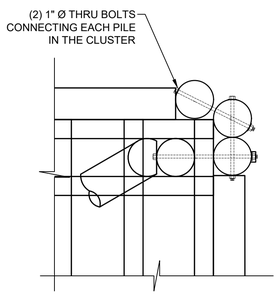

PLAN

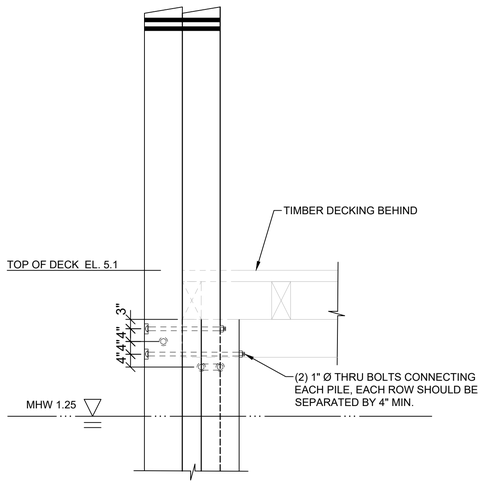

SECTION

4 SKK-301 *CORNER CLUSTER DETAIL*
SCALE: 1/2" = 1'-0"

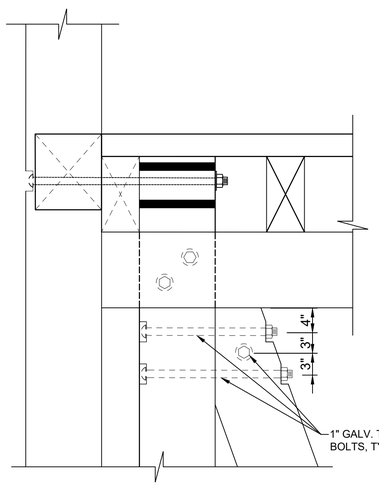

BATTER PILE BOLTING DETAIL
SCALE: 1" = 1'-0"

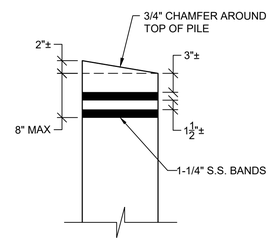

FENDER PILE BANDING DETAIL
SCALE: 1" = 1'-0"

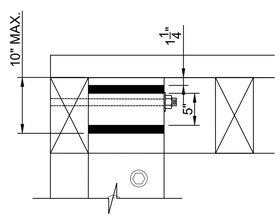

BEARING PILE BANDING DETAIL
SCALE: 1" = 1'-0"

NOTES:

1. FENDER PILE AND CHOCK NOT SHOWN FOR CLARITY.
2. SPACING BETWEEN SS BANDING TO BE DEPENDENT ON THE THRU BOLT CONNECTION BETWEEN THE FENDER AND BEARING PILE.

ISSUED FOR PERMIT
NOT FOR CONSTRUCTION
IF PRINTED 11X17 DRAWING IS HALF SIZE

RECEIVED
8/12/2026
COASTAL RESOURCES MANAGEMENT COUNCIL

REAGAN MARINE CONSTRUCTION

Narragansett DockWorks

PARE
PARE CORPORATION
www.parecorp.com

SCALE ADJUSTMENT GUIDE
0" 1"
BAR IS ONE INCH ON ORIGINAL DRAWING

PIER 'KK' REMOVAL AND REPLACEMENT
PORT OF GALILEE: PHASE V
NARRAGANSETT, RHODE ISLAND

RHODE ISLAND
DEPARTMENT OF ENVIRONMENTAL MANAGEMENT

JON PAUL NANNI II
No. 15205
REGISTERED PROFESSIONAL ENGINEER
CIVIL
29 July 2026

REVISIONS:		
D	4/10/2026	90% IFCR
E	4/24/2026	BUILDING PERMIT
F	7/20/2026	100% IFCR
G	7/29/2026	RICRMC PERMIT

PROJECT NO.:	23153.03
DATE:	JULY 2026
SCALE:	AS NOTED
DESIGNED BY:	TJD
CHECKED BY:	JPN
DRAWN BY:	TJD
APPROVED BY:	TDT

DRAWING TITLE:

PROPOSED PIER DETAILS

DRAWING NO.:
SKK-501

SHEET NO. 11 OF 13

V:\23153.03 JOBS\2310\13 RIBDM GALILEE PHASE 5_NOAA\REAGAN OB-BROWSER\ *KK*SKK-202 PROPOSED PIER DETAILS 2.DWG

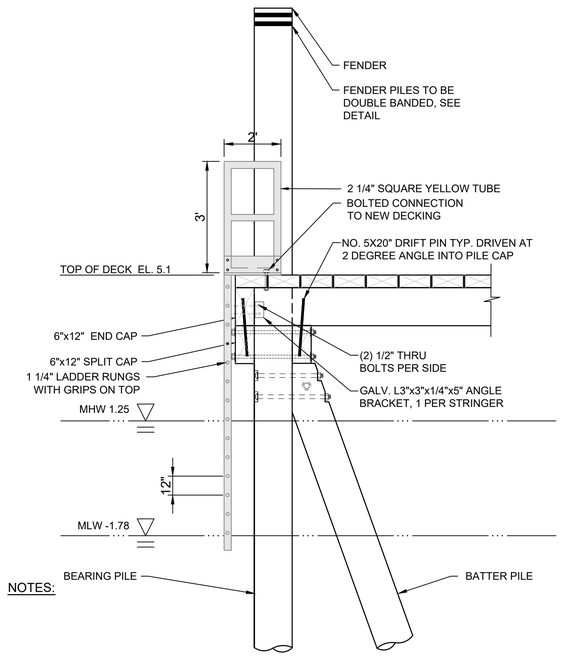

NOTES:

1. THE DETAIL IS FOR REFERENCE PURPOSES ONLY. THE OWNER MAY ELECT TO INSTALL A LADDER OF A NEW DESIGN.
2. FENDER PILE END CLUSTER OMITTED FOR CLARITY.

PROPOSED SAFETY LADDER DETAIL

SCALE: 1/2" = 1'-0"

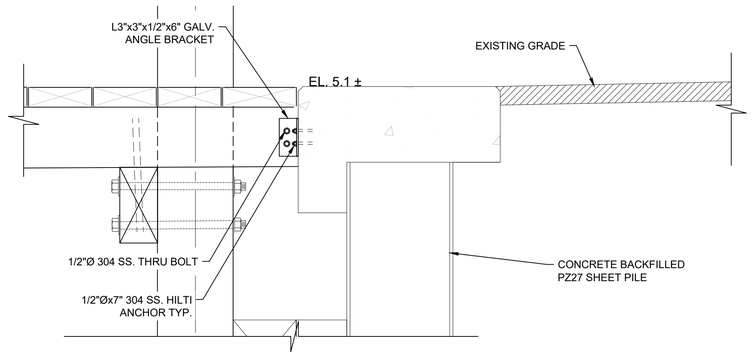

3 SKK-301 PIER TO BULKHEAD CONNECTION DETAIL

SCALE: 1" = 1'-0"

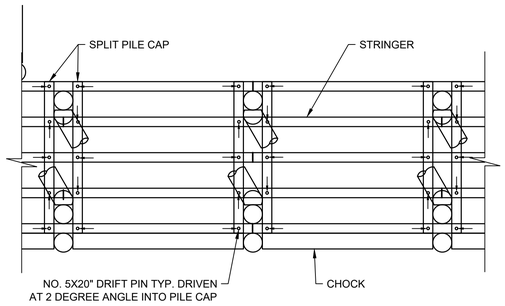

NOTES:

1. ADJACENT STRINGERS TO BE STAGGERED SO THE TERMINAL POINT OF THE STRINGER IS NOT LOCATED AT THE SAME BENT AS AN ADJACENT BENT.
2. DRIFT PINS SHOULD BE DRIVEN AT A 3°-5° ANGLE INTO THE PILE CAP BELOW. ANGLE DIRECTION SHOULD ALTERNATE EACH SIDE OF EACH BENT.

PILE CAP TO STRINGER DETAIL

SCALE: 1/4" = 1'-0"

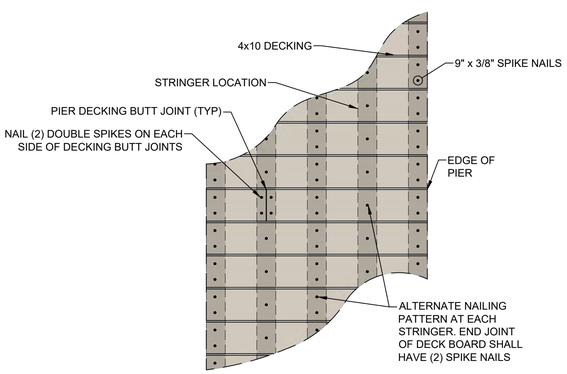

NAILING SCHEDULE

SCALE: 1/2" = 1'-0"

ISSUED FOR PERMIT
NOT FOR CONSTRUCTION
IF PRINTED 11X17 DRAWING IS HALF SIZE

RECEIVED
8/12/2026
COASTAL RESOURCES MANAGEMENT COUNCIL

REAGAN MARINE CONSTRUCTION

Narragansett DockWorks

PARE CORPORATION
www.parecorp.com

SCALE ADJUSTMENT GUIDE
0" 1"
BAR IS ONE INCH ON ORIGINAL DRAWING

PIER 'KK' REMOVAL AND REPLACEMENT
PORT OF GALILEE: PHASE V
NARRAGANSETT, RHODE ISLAND

RHODE ISLAND
DEPARTMENT OF ENVIRONMENTAL MANAGEMENT

JON PAUL NANNI II
No. 15205
REGISTERED PROFESSIONAL ENGINEER CIVIL
25 JULY 2026

REVISIONS:

D	4/10/2026	90% IFCR
E	4/24/2026	BUILDING PERMIT
F	7/20/2026	100% IFCR
G	7/29/2026	RICRMC PERMIT

PROJECT NO.:	23153.03
DATE:	JULY 2026
SCALE:	AS NOTED
DESIGNED BY:	TJD
CHECKED BY:	JPN
DRAWN BY:	TJD
APPROVED BY:	TDT

DRAWING TITLE:

PROPOSED PIER DETAILS 2

DRAWING NO.:
SKK-502

SHEET NO. 12 OF 13

Page 2-17

GUILD DRILLING CO., INC.
100 WATER STREET EAST PROVIDENCE, R I

SHEET 1 OF 2
DATE
HOLE NO. 16
LINE & STA.
OFFSET
SURF. ELEV.

TO State of Rhode Island | ADDRESS Providence, R.I.
PROJECT NAME State Piers - Galilee | LOCATION Narragansett, R.I.
REPORT SENT TO above /Fishing Area | PROJ. NO.
SAMPLES SENT TO " | OUR JOB NO. 80-100

GROUND WATER OBSERVATIONS
At 4'8" after Hours
M.L.W. 0.0
At after Hours

	Rods "AW"	CASING	SAMPLER	CORE BAR.
Type	BW		S/S	
Size I.D.	2¼"		1 3/8"	
Hammer Wt.	300#		140#	BIT
Hammer Fall	24"		30"	

	Date	Time
START	9/25/79	a.m.
COMPLETE	9/25/79	p.m.
TOTAL HRS.		a.m. p.m.
BORING FOREMAN	Peterson	
INSPECTOR		
SOILS ENGR.		

LOCATION OF BORING: Galilee

DEPTH	Casing Blows per foot	Sample Depths From–To	Type of Sample	Blows per 6" on Sampler From 0-6	6-12	To 12-18	Moisture Density or Consist.	Strata Change Elev.	SOIL IDENTIFICATION Remarks include color, gradation, Type of soil etc. Rock-color, type, condition, hardness, Drilling time, seams and etc.	SAMPLE No.	Pen	Rec.
								0.0	M.L.W.			
		4'8"-7'	D	1	–	1	Wet loose	4'8"	Gray fine to coarse SAND, little silt,tr.shells & fine gravel (organic)	1	28"	18"
3								7'				
17									Gray fine to coarse SAND, some fine to coarse gravel, little silt,trace cobbles	2	18"	18"
30												
10		8'6"-10'	D	11	21	4	Wet/m dense					
10								13'6"				
10									Gray fine to medium SAND, little silt,tr.medium gravel & shells	3	18"	18"
17												
3		13'6"-15'	D	10	12	11	"					
17												
19												
10												
13												
14												
27		18'6"-20'	D	8	10	9	"		" trace F-C gravel	4	18"	12"
40												
12												
26								23'6"				
30									Gray fine to medium SAND,tr. of silt & medium sand	5	18"	18"
33		23'6"-25'	D	6	8	9	"	25'				
20												
20												
		28'6"-30'	D	1	1	1	Wet soft		Gray Marine (organic) SILT, trace of shells	6	18"	18"
		33'6"-35'	D	1	1	1	"		"	7	18"	18"
		38'6"-40'	D	1	1	1	"		"	8	18"	18"

GROUND SURFACE TO 53'6" USED BW "CASING: THEN S/S to 55'

Sample Type: D=Dry C=Cored W=Washed; UP=Undisturbed Piston; TP=Test Pit A=Auger V=Vane Test; UT=Undisturbed Thinwall

Proportions Used: trace 0 to 10%; little 10 to 20%; some 20 to 35%; and 35 to 50%

140 lb Wt. x 30" fall on 2" O.D. Sampler
Cohesionless Density: 0-10 Loose; 10-30 Med. Dense; 30-50 Dense; 50+ Very Dense
Cohesive Consistency: 0-4 Soft; 4-8 M/Stiff; 8-15 Stiff; 15-30 V-Stiff; 30+ Hard

SUMMARY: Earth Boring 25'; Rock Coring 11'; Samples

HOLE NO. 16

Page 2-18

GUILD DRILLING CO., INC.
100 WATER STREET EAST PROVIDENCE, R I

SHEET 2 OF 2
DATE
HOLE NO. 16
LINE & STA.
OFFSET
SURF. ELEV.

TO | ADDRESS
PROJECT NAME | LOCATION
REPORT SENT TO | PROJ. NO.
SAMPLES SENT TO | OUR JOB NO. 80-100

GROUND WATER OBSERVATIONS
At after Hours
At after Hours

	CASING	SAMPLER	CORE BAR.
Type			
Size I.D.			
Hammer Wt.			BIT
Hammer Fall			

	Date	Time
START		a.m.
COMPLETE		p.m.
TOTAL HRS.		a.m. p.m.
BORING FOREMAN		
INSPECTOR		
SOILS ENGR.		

LOCATION OF BORING:

DEPTH	Casing Blows per foot	Sample Depths From–To	Type of Sample	Blows per 6" on Sampler From 0-6	6-12	To 12-18	Moisture Density or Consist.	Strata Change Elev.	SOIL IDENTIFICATION Remarks include color, gradation, Type of soil etc. Rock-color, type, condition, hardness, Drilling time, seams and etc.	SAMPLE No.	Pen	Rec.
		43'6"-45'	D	1	1	1	Wet soft	46'	Gray Marine (organic) SILT, trace shells	9	8"	18"
		48'6"-50'	D	20	30	30	Wet/v dense		Gray silty fine to coarse SAND & fine to coarse gravel trace cobbles	10	8"	12"
		53'-55'	D	15	17	20	W/dense	55'	" some silt	11	8"	12"
									Bottom of Boring 55'			

GROUND SURFACE TO USED "CASING: THEN

Sample Type: D=Dry C=Cored W=Washed; UP=Undisturbed Piston; TP=Test Pit A=Auger V=Vane Test; UT=Undisturbed Thinwall

Proportions Used: trace 0 to 10%; little 10 to 20%; some 20 to 35%; and 35 to 50%

140 lb Wt. x 30" fall on 2" O.D. Sampler
Cohesionless Density: 0-10 Loose; 10-30 Med. Dense; 30-50 Dense; 50+ Very Dense
Cohesive Consistency: 0-4 Soft; 4-8 M/Stiff; 8-15 Stiff; 15-30 V-Stiff; 30+ Hard

SUMMARY: Earth Boring; Rock Coring; Samples

HOLE NO. 16

Page 2-19

GUILD DRILLING CO., INC.
100 WATER STREET EAST PROVIDENCE, R I

SHEET 1 OF 2
DATE
HOLE NO. 17
LINE & STA.
OFFSET
SURF. ELEV.

TO State of Rhode Island | ADDRESS Providence, R.I.
PROJECT NAME State Piers - Galilee | LOCATION Narragansett, R.I.
REPORT SENT TO above /Fishing Area | PROJ. NO.
SAMPLES SENT TO " | OUR JOB NO. 80-100

GROUND WATER OBSERVATIONS
At 6' after Hours
M.L.W.+0.0
At after Hours

	Rods "AW"	CASING	SAMPLER	CORE BAR.
Type	BW		S/S	
Size I.D.	2¼"		1 3/8"	
Hammer Wt.	300#		140#	BIT
Hammer Fall	24"		30"	

	Date	Time
START	9/25/79	a.m.
COMPLETE	9/25/79	p.m.
TOTAL HRS.		a.m. p.m.
BORING FOREMAN	Peterson	
INSPECTOR		
SOILS ENGR.		

LOCATION OF BORING: Galilee

DEPTH	Casing Blows per foot	Sample Depths From–To	Type of Sample	Blows per 6" on Sampler From 0-6	6-12	To 12-18	Moisture Density or Consist.	Strata Change Elev.	SOIL IDENTIFICATION Remarks include color, gradation, Type of soil etc. Rock-color, type, condition, hardness, Drilling time, seams and etc.	SAMPLE No.	Pen	Rec.
								0.0	M.L.W.			
								6'	Bottom Harbor			
		6'-10'	D	Wgt. of Hammer			Wet soft	8'	Black oily SILT & fine Sand	1	48"	20"
1												
2												
10												
8												
6												
6												
14		13'6"-15'	D	2	2	3	Wet loose		Gray very fine SAND,some silt,trace shells	2	18"	12"
10												
16												
26								18'6"				
35												
10		18'6"-20'	D	2	2	3	"		Gray fine to medium SAND, trace silt & shells	3	18"	12"
9												
10								22'				
15									Gray fine to medium SAND, fine to coarse gravel mixed with Marine silt, tr.shells	4	18"	18"
17												
12		23'6-25'	D	15	14	9	Wet/m dense	26'				
13												
13												
29									Dark Gray fine to coarse SAND w/silt layers,some fine to medium gravel	5	18"	18"
27		28'6"-30'	D	7	5	6	"					
30												
30								33'				
36												
102												
36		33'6"-35'	D	12	20	18	Wet dense		Brown fine to coarse SAND w/silt layers,little fine to coarse gravel	6	18"	18"
74												
70												
54								38'6"				
44												
46		38'6"-40'	D	14	14	18	"		Brown fine SAND,silt w/tr. fine gravel & coarse sand	7	18"	12"

GROUND SURFACE TO 53'6" USED BW "CASING: THEN S/S to 55'

Sample Type: D=Dry C=Cored W=Washed; UP=Undisturbed Piston; TP=Test Pit A=Auger V=Vane Test; UT=Undisturbed Thinwall

Proportions Used: trace 0 to 10%; little 10 to 20%; some 20 to 35%; and 35 to 50%

140 lb Wt. x 30" fall on 2" O.D. Sampler
Cohesionless Density: 0-10 Loose; 10-30 Med. Dense; 30-50 Dense; 50+ Very Dense
Cohesive Consistency: 0-4 Soft; 4-8 M/Stiff; 8-15 Stiff; 15-30 V-Stiff; 30+ Hard

SUMMARY: Earth Boring 55'; Rock Coring; Samples

HOLE NO. 17

Page 2-20

GUILD DRILLING CO., INC.
100 WATER STREET EAST PROVIDENCE, R I

SHEET 2 OF 2
DATE
HOLE NO. 17
LINE & STA.
OFFSET
SURF. ELEV.

TO | ADDRESS
PROJECT NAME | LOCATION
REPORT SENT TO | PROJ. NO.
SAMPLES SENT TO | OUR JOB NO. 80-100

GROUND WATER OBSERVATIONS
At after Hours
At after Hours

	CASING	SAMPLER	CORE BAR.
Type			
Size I.D.			
Hammer Wt.			BIT
Hammer Fall			

	Date	Time
START		a.m.
COMPLETE		p.m.
TOTAL HRS.		a.m. p.m.
BORING FOREMAN		
INSPECTOR		
SOILS ENGR.		

LOCATION OF BORING:

DEPTH	Casing Blows per foot	Sample Depths From–To	Type of Sample	Blows per 6" on Sampler From 0-6	6-12	To 12-18	Moisture Density or Consist.	Strata Change Elev.	SOIL IDENTIFICATION Remarks include color, gradation, Type of soil etc. Rock-color, type, condition, hardness, Drilling time, seams and etc.	SAMPLE No.	Pen	Rec.
	26											
	34											
	30											
	43											
	43	43'6"-45'	D	14	14	18	Wet dense	47'	Yellow Brown silty fine to coarse SAND,some F-M gravel	8	18"	12"
	25											
	40											
	45											
	49											
	70	48'6"-50'	D	14	26	30	Wet/v dense		Brown Gray fine to medium SAND,silt,some fine to coar. gravel,trace coarse sand	9	18"	12"
	62											
	78											
	95											
	48'6"						Wet	55'	" & fine gravel (coma)	10	18"	2"
	9	53'6"-55'	D	18	20	24	dense		Bottom of Boring 55'			

GROUND SURFACE TO USED "CASING: THEN

Sample Type: D=Dry C=Cored W=Washed; UP=Undisturbed Piston; TP=Test Pit A=Auger V=Vane Test; UT=Undisturbed Thinwall

Proportions Used: trace 0 to 10%; little 10 to 20%; some 20 to 35%; and 35 to 50%

140 lb Wt. x 30" fall on 2" O.D. Sampler
Cohesionless Density: 0-10 Loose; 10-30 Med. Dense; 30-50 Dense; 50+ Very Dense
Cohesive Consistency: 0-4 Soft; 4-8 M/Stiff; 8-15 Stiff; 15-30 V-Stiff; 30+ Hard

SUMMARY: Earth Boring; Rock Coring; Samples

HOLE NO. 17

RECEIVED
8/12/2026
COASTAL RESOURCES MANAGEMENT COUNCIL

Page 2-21

GUILD DRILLING CO., INC.
100 WATER STREET EAST PROVIDENCE, R I

SHEET 1 OF 2
DATE
HOLE NO. 18
LINE & STA.
OFFSET
SURF. ELEV.

TO State of Rhode Island | ADDRESS Providence, R.I.
PROJECT NAME State Piers - Galilee | LOCATION Narragansett, R.I.
REPORT SENT TO above /Fishing Area | PROJ. NO.
SAMPLES SENT TO " | OUR JOB NO. 80-100

GROUND WATER OBSERVATIONS
At 8' after Hours
M.L.W.+0.0
At after Hours

	Rods "AW"	CASING	SAMPLER	CORE BAR.
Type	BW		S/S	
Size I.D.	2¼"		1 3/8"	
Hammer Wt.	300#		140#	BIT
Hammer Fall	24"		30"	

	Date	Time
START	9/27/79	a.m.
COMPLETE	9/27/79	p.m.
TOTAL HRS.		a.m. p.m.
BORING FOREMAN	Peterson	
INSPECTOR		
SOILS ENGR.		

LOCATION OF BORING: Galilee

DEPTH	Casing Blows per foot	Sample Depths From–To	Type of Sample	Blows per 6" on Sampler From 0-6	6-12	To 12-18	Moisture Density or Consist.	Strata Change Elev.	SOIL IDENTIFICATION Remarks include color, gradation, Type of soil etc. Rock-color, type, condition, hardness, Drilling time, seams and etc.	SAMPLE No.	Pen	Rec.
								8'	Bottom Channel			
	2	8'-10'	D	1	–	1	Wet/loose	10'	Black oily fine SAND &Marine Silt,trace shells	1	24"	18"
	3											
	4											
	5											
	7											
	9	13'6"-15'	D	1	2	3	"		Gray fine SAND,some silt, trace shells (organic)	2	18"	12"
	13											
	22											
	31							18'6"				
	34								Gray fine to coarse SAND, trace shells & silt			
	35	18'6"-20'	D	1	2	3	"	20'		3	18"	18"
	17											
	21											
	25											
	21											
	24	23'6"-25'	D	1	–	1	Wet soft		Gray Marine (organic) SILT, trace shells	4	18"	18"
	31											
	26											
	27											
	25											
	35	28'6"-30'	D	1	1	1	"	30'	"	5	18"	8"
	35											
	48								Blue Gray fine to medium SAND & Silt			
	43							33'				
	60											
	49	33'6"-35'	D	10	15	15	Wet/m dense		Blue Gray fine to coarse SAND,some silt,fine to medium gravel	6	18"	12"
	54											
	58											
	68							38'				
	80											
	61	38'6"-40'	D	19	20	19	Wet dense		Brown fine to coarse SAND & F-M gravel, some silt	7	18"	12"

GROUND SURFACE TO 53'6" USED BW "CASING: THEN S/S to 55'

Sample Type: D=Dry C=Cored W=Washed; UP=Undisturbed Piston; TP=Test Pit A=Auger V=Vane Test; UT=Undisturbed Thinwall

Proportions Used: trace 0 to 10%; little 10 to 20%; some 20 to 35%; and 35 to 50%

140 lb Wt. x 30" fall on 2" O.D. Sampler
Cohesionless Density: 0-10 Loose; 10-30 Med. Dense; 30-50 Dense; 50+ Very Dense
Cohesive Consistency: 0-4 Soft; 4-8 M/Stiff; 8-15 Stiff; 15-30 V-Stiff; 30+ Hard

SUMMARY: Earth Boring 55'; Rock Coring 10'; Samples

HOLE NO. 18

Page 2-22

GUILD DRILLING CO., INC.
100 WATER STREET EAST PROVIDENCE, R I

SHEET 2 OF 2
DATE
HOLE NO. 18
LINE & STA.
OFFSET
SURF. ELEV.

TO | ADDRESS
PROJECT NAME | LOCATION
REPORT SENT TO | PROJ. NO.
SAMPLES SENT TO | OUR JOB NO. 80-100

GROUND WATER OBSERVATIONS
At after Hours
At after Hours

	CASING	SAMPLER	CORE BAR.
Type			
Size I.D.			
Hammer Wt.			BIT
Hammer Fall			

	Date	Time
START		a.m.
COMPLETE		p.m.
TOTAL HRS.		a.m. p.m.
BORING FOREMAN		
INSPECTOR		
SOILS ENGR.		

LOCATION OF BORING:

DEPTH	Casing Blows per foot	Sample Depths From–To	Type of Sample	Blows per 6" on Sampler From 0-6	6-12	To 12-18	Moisture Density or Consist.	Strata Change Elev.	SOIL IDENTIFICATION Remarks include color, gradation, Type of soil etc. Rock-color, type, condition, hardness, Drilling time, seams and etc.	SAMPLE No.	Pen	Rec.
	74											
	80											
	83											
	81											
	70	43'6"-45'	D	15	16	14	Wet/m dense		Brown fine to coarse SAND, & fine to medium gravel,little silt,trace cobbles	8	18"	12"
	76											
	78											
	94							48'6"				
	78											
	79	48'6"-50'	D	22	19	18	Wet dense		Brown coarse to fine SAND & fine Gravel,little silt,tr. cobbles	9	18"	12"
	86											
	95											
	105							53'6"				
	60/6"								Brown silty fine to coarse SAND & fine Gravel (compact			
		53'6"-55'	D	18	21	24	"	55'	Bottom of Boring 55' Trace cobbles	10	18"	12"

GROUND SURFACE TO USED "CASING: THEN

Sample Type: D=Dry C=Cored W=Washed; UP=Undisturbed Piston; TP=Test Pit A=Auger V=Vane Test; UT=Undisturbed Thinwall

Proportions Used: trace 0 to 10%; little 10 to 20%; some 20 to 35%; and 35 to 50%

140 lb Wt. x 30" fall on 2" O.D. Sampler
Cohesionless Density: 0-10 Loose; 10-30 Med. Dense; 30-50 Dense; 50+ Very Dense
Cohesive Consistency: 0-4 Soft; 4-8 M/Stiff; 8-15 Stiff; 15-30 V-Stiff; 30+ Hard

SUMMARY: Earth Boring; Rock Coring; Samples

HOLE NO. 18

ISSUED FOR PERMIT
NOT FOR CONSTRUCTION
IF PRINTED 11X17 DRAWING IS HALF SIZE

REAGAN MARINE CONSTRUCTION
Narragansett DockWorks

PARE CORPORATION
www.parecorp.com

SCALE ADJUSTMENT GUIDE
0" 1"
BAR IS ONE INCH ON ORIGINAL DRAWING

PIER 'KK' REMOVAL AND REPLACEMENT
PORT OF GALILEE: PHASE V
NARRAGANSETT, RHODE ISLAND
RHODE ISLAND
DEPARTMENT OF ENVIRONMENTAL MANAGEMENT

JON PAUL NANNI II
No. 15205
REGISTERED PROFESSIONAL ENGINEER
CIVIL
7-29-2026

REVISIONS:		
D	4/10/2026	90% IFCR
E	4/24/2026	BUILDING PERMIT
F	7/20/2026	100% IFCR
G	7/29/2026	RICRMC PERMIT

PROJECT NO.:	23153.03
DATE:	JULY 2026
SCALE:	AS NOTED
DESIGNED BY:	TJD
CHECKED BY:	JPN
DRAWN BY:	TJD
APPROVED BY:	TDT

DRAWING TITLE:

BORING INFORMATION

DRAWING NO.:
BKK-001
SHEET NO. 13 OF 13

V:\2023\23153.03 RIDEM GALILEE PHASE 5_NOAA\REACON OB-ROVER\PIER 'KK'\BKK-001 BORING INFO.DWG